DANVILLE CITY COUNCIL REGULAR MEETING

AGENDA

MUNICIPAL BUILDING

May 6, 2025

7:00 PM

PRESIDING:	Alonzo L. Jones, Mayor	
CITY COUNCIL MEMBERS:	James B. Buckner, Vice Mayor L.G. "Larry" Campbell, Jr. Bryant Hood Barry P. Mayo	Dr. Gary P. Miller Sherman M. Saunders J. Lee Vogler, Jr., Madison J. Whittle
STAFF:	Ken F. Larking, City Manager Earl B. Reynolds, Jr., Deputy City Manager	W. Clarke Whitfield, Jr., City Attorney Susan M. DeMasi, City Clerk

The City Council is the City of Danville's legislative body and is composed of nine Council members. Council members are elected to serve a four year term of office and elects one of its own to serve as Mayor and presiding officer for a two year term.

Time and Place of Meeting
The public is invited and encouraged to attend and participate in the City Council meetings. The City Council meets in the City Hall, Fourth Floor, Council Chambers at 7:00 p.m. on the first and third Tuesday of each month. All meetings of the Council are open to the public.

Communications from Visitors
Communication from Visitors is an opportunity for citizens, who have signed up to speak at www.danvilleva.gov/council or by contacting the Office of the City Clerk, to address Council on matters not on the agenda. Citizens who desire to speak on agenda items will be heard when the agenda item is considered. Each speaker shall clearly state his or her name and address, and shall have three uninterrupted minutes. A representative of a group may have up to five uninterrupted minutes to make a presentation. The representative shall identify the group and a group may have no more than one spokesperson. Time will be kept using the electronic timer on the podium.

Guidelines for Public Hearings
For Public Hearings the applicant or his or her representative shall be the first speaker(s). There shall be a time limit of ten (10) minutes for the applicant's or his or her representative's presentation. The presiding officer shall then solicit comments from the public, asking those in favor of the proposal to speak first, and then those opposed to the proposal. Each speaker must clearly state his or her name and address. There shall be a time limit of three (3) minutes for each individual speaker. If the speaker represents a group, there shall be a time limit of five (5) minutes. A speaker representing a group shall identify the group at the beginning of his or her remarks. A group may have no more than one spokesperson. The presiding officer may limit or preclude comment which is repetitive, redundant, cumulative, or irrelevant to the subject of the public hearing. After public comments have been received, in a land use case, the applicant or the representative of the applicant, at his or her discretion, may respond with a rebuttal. There shall be a five (5) minute time limit for rebuttal.

MEETING CALLED TO ORDER

ROLL CALL

INVOCATION - SHERMAN M. SAUNDERS

PLEDGE OF ALLEGIANCE TO THE FLAG

ANNOUNCEMENTS AND SPECIAL RECOGNITION

A. Proclamation: Make Danville Shine Month

Presented to: Dana Kern, Community Development

CONSENT AGENDA

All matters listed under the Consent Agenda are considered to be routine, have previously been discussed by City Council and/or introduced for First Reading. There will be no separate discussion on these items and they will be enacted by one motion. If discussion is desired by a Council Member or a citizen, the item(s) will be removed from the consent process and considered separately.

PUBLIC HEARING

A. Consideration of Approval of Minutes from Regular Council Meeting held on April 1, 2025.
Council Letter Number CL - 2030.

B. Consideration of Amending the Fiscal Year 2025 Budget Appropriation Ordinance for a Grant and Loan from the Virginia Tobacco Region and Revitalization Commission.
Council Letter Number CL - 1960.

An Ordinance Amending the Fiscal Year 2025 Budget Appropriation Ordinance to Provide for a Virginia Tobacco Region and Revitalization Commission $750,000 Grant and $750,000 Loan to Assist with the City's Mount Cross Road Battery Energy Storage System.
Final Adoption

C. Consideration of Amending the Fiscal Year 2025 Budget Appropriation Ordinance to Provide Support to the Neighbors Helping Neighbors Program.
Council Letter Number CL - 1986.

An Ordinance Amending the Fiscal Year 2025 Budget Appropriation Ordinance by Increasing Revenues from the Casino Gaming Taxes to Provide Support to Neighbors Helping Neighbors in the Amount of $200,000 and Appropriating the Same.
Final Adoption

D. Consideration of Amending the Fiscal Year 2025 Budget Appropriation Ordinance to Fund a One-Year Utility Customer Credit.
Council Letter Number CL - 1987.

An Ordinance Amending the Fiscal Year 2025 Budget Appropriation Ordinance to Fund a One-Year Utility Customer Credit Using Excess Casino Gaming Taxes in an Amount Not to Exceed $2,400,000 and Appropriating Same.
Final Adoption

E. Consideration of Amending the Fiscal Year 2025 Budget Appropriation Ordinance to Fund the City Residential HVAC/Insulation Project.

Council Letter Number CL - 1988.

An Ordinance Amending the Fiscal Year 2025 Budget Appropriation Ordinance by Increasing Revenues from Casino Gaming Taxes to Fund a City Residential HVAC/Insulation Project in the Amount of $500,000 and Appropriating Same.
Final Adoption

APPOINTMENTS

A. Consideration of Appointments to Boards and Commissions.
Council Letter Number CL - 1992.

1. A Resolution appointing Lucius Chandler to fill an unexpired term on the Danville Redevelopment and Housing Authority.
2. A Resolution appointing Barry Mayo to fill an unexpired term on the Danville Redevelopment and Housing Authority.
3. A Resolution appointing Kristen Barker to the Danville Development Authority for a term ending November 20, 2025.
4. A Resolution appointing James Bebeau to the Danville Development Authority for a term ending November 20, 2026.
5. A Resolution appointing John Laramore to the Danville Development Authority for a term ending November 20, 2026.
6. A Resolution appointing Philip Hall to the Danville Development Authority for a term ending November 20, 2026.
7. A Resolution appointing Robert Woodall to the Danville Development Authority for a term ending November 20, 2026.
8. A Resolution appointing Russell Reynold to the Danville Development Authority for a term ending November 20, 2028.
9. A Resolution appointing T. Neal Morris to the Danville Development Authority for a term ending November 20, 2028.

NEW BUSINESS

A. Consideration of Special Use Permit Application filed by Kare Partners, LLC at Parcel 77074 (119 Cane Creek Boulevard).
Council Letter Number CL - 1952.

1. Public Hearing

2. An Ordinance Granting Special Use Permit Application PZ25- 00160, filed by Kare Partners, LLC, Requesting a Special Use Permit to Allow Uses by Right and by Special Use Permit in the HR-C Highway Retail Commercial Zoning District (Child Therapeutic Day Support Services) at Parcel 77074 (119 Cane Creek Boulevard) in Accordance with Article 3.O., Section C., Item 15.

B. Consideration of Special Use Permit Application filed by Christine Fuston to Allow a Child Day Care Center at 1218 West Main Street.
Council Letter Number CL - 2015.

1. Public Hearing

2. An Ordinance Granting Special Use Permit Application PZ25- 00164 filed by Christine Fuston to Allow a Child Day Care Center at Parcel 51471 (1218 West Main Street) in Accordance with Article 3.M., Section C., Item 6.

C. Consideration of Rezoning Application filed by Blackstone Building Group LLC to Rezone Parcel 78585 (Vandola Road).

Council Letter Number CL - 2016.

1. Public Hearing

2. An Ordinance Granting Rezoning Application PZ25-00194 filed by Blackstone Building Group LLC to Rezone Parcel 78585 (Vandola Road) from S-R Suburban Residential to A-R Attached Residential.

D. Consideration of Adjusting Utility Rates for Utility Services.
Council Letter Number CL - 1996.

1. Public Hearing

2. An Ordinance Adjusting Utility Rates for Utility Services Effective July 1, 2025.

E. Consideration of the Fiscal Year 2026 Danville Public Schools Budget.
Council Letter Number CL - 1975.

1. Public Hearing

2. A Resolution Approving the Budget of the School Board of the City of Danville for the Fiscal Year Ending June 30, 2026.
First Reading

F. Consideration of Fee Changes Effective July 1, 2025.
Council Letter Number CL - 1974.

1. Public Hearing

2. An Ordinance Amending and Establishing and Increasing Certain Fees of the City of Danville Effective July 1, 2025.
First Reading

G. Consideration of the Issuance of Danville IDA Lease Revenue Bonds.
Council Letter Number CL - 2036.

A Resolution Approving and Authorizing a Plan to Finance Certain Economic Development Projects Through the Issuance of a Lease Revenue Bond by the Industrial Development Authority of Danville, Virginia.

H. Consideration of Repealing and Reordaining Chapter 23.1 entitled "Noise" of the Danville City Code.
Council Letter Number CL - 2007.

An Ordinance Repealing and Reordaining in its Entirety Chapter 23.1, Entitled “Noise”, of the Code of the City of Danville, Virginia, 1986, As Amended.

I. Consideration of Amending the Fiscal Year 2025 Budget Appropriation Ordinance for the Comprehensive Services Act.
Council Letter Number CL - 1934.

An Ordinance Amending the Fiscal Year 2025 Budget Appropriation Ordinance by Appropriating Comprehensive Services Act Funds and Providing Local Matching Funds for a Total Amount of $5,709,442 and Appropriating Same.
First Reading

J. Consideration of Amending the Fiscal Year 2025 Budget Appropriation Ordinance for the Victim Witness Grant Program.
Council Letter Number CL - 1973.

An Ordinance Amending the Fiscal Year 2025 Budget Appropriation Ordinance to Provide for a Grant from the State for a Victim Witness Program in the Amount of $177,083, with a Local Match of $1,250 for a total of $178,333 and Appropriating Same.
First Reading

K. Consideration of Amending the Fiscal Year 2025 Budget Appropriation Ordinance for a Shield Grant in the Amount of $15,381.
Council Letter Number CL - 2005.

An Ordinance Amending the Fiscal Year 2025 Budget Appropriation Ordinance by Increasing Revenue from Virginia Department of Criminal Justice Services–BJA Fiscal Year 2024 Byrne/JAG Program Ballistic Shield Grant in the Amount of $15,381 and Appropriating the Same.
First Reading

L. Consideration of Amending the Fiscal Year 2025 Budget Appropriation Ordinance for a CIT MARCUS Alert Co-Response Grant in the Amount of $100,000.
Council Letter Number CL - 2025.

An Ordinance Amending the Fiscal Year 2025 Budget Appropriation Ordinance by Increasing Revenue from Virginia Department Criminal Justice Services – FY 2025 CIT/MARCUS Alert Grant Program in the Amount of $100,000 and Appropriating Same.
First Reading

COMMUNICATIONS FROM VISITORS

Communication from Visitors is an opportunity for citizens, who have signed up to speak at www.danvilleva.gov/council or by contacting the Office of the City Clerk, to address Council on matters not on the agenda. Citizens who desire to speak on agenda items will be heard when the agenda item is considered. Each speaker shall clearly state his or her name and address. Each individual speaker shall have three uninterrupted minutes. A representative of a group may have up to five uninterrupted minutes to make a presentation. The representative shall identify the group and a group may have no more than one spokesperson. Time will be kept using the electronic timer on the podium.

COMMUNICATIONS

A. City Manager

B. Deputy City Manager

C. City Attorney

D. City Clerk

E. Roll Call

ADJOURNMENT

Council Letter
City of Danville, Virginia

CL - 2030 **CONSENT AGENDA A.**

City Council REGULAR MEETING

Meeting Date: May 6, 2025
Subject: Approval of Meeting Minutes.
From: Susan DeMasi, City Clerk

COUNCIL ACTION

Consideration of Approval of Minutes from Regular Council Meeting held on April 1, 2025.

Attachments

1. Meeting Minutes

The Regular April meeting of the Danville City Council was held on April 1, 2025, at 7:00 p.m. in the Council Chambers located on the Fourth Floor of the Municipal Building. The following Council Members were present: L.G. "Larry" Campbell Jr., Bryant Hood, Mayor Alonzo L. Jones, Barry Mayo, Gary P. Miller, Sherman M. Saunders, J. Lee Vogler, Jr., and Madison J.R. Whittle (8). Absent: James B. Buckner (1).

Staff Members present were: City Manager Ken F. Larking, Deputy City Manager Earl B. Reynolds, Jr., Deputy City Attorney Alan B. Spencer, and City Clerk Susan M. DeMasi.

Mayor Jones presided.

INVOCATION AND PLEDGE OF ALLEGIANCE

Council Member J. Lee Vogler, Jr. gave the Invocation followed by the Pledge of Allegiance.

CONSENT AGENDA

Mayor Jones opened the floor for a Public Hearing regarding budget items on the Consent Agenda. Notice of the Public Hearing was published in the *Danville Register & Bee* on March 25, 2025. No one present desired to be heard and the Public Hearing was closed.

Council Member Campbell **moved** for adoption of the Consent Agenda:

Consideration of Approval of Minutes from Regular Council Meeting held on March 4, 2025. Draft copies of the minutes had been distributed prior to the meeting.

Consideration of Amending the Fiscal Year 2025 Budget Appropriation Ordinance to Fund a Bonus Payment to City Retirees

An Ordinance entitled, Ordinance No. 2025-03.08, an Ordinance Amending the Fiscal Year 2025 Budget Appropriation Ordinance by Increasing Revenues from Interest Income to Fund a Bonus for City Retirees in an Amount not to Exceed $725,000 and Appropriating the Same.

The Motion was **seconded** by Council Member Mayo and carried the following vote:

VOTE:	8-0
AYE:	Campbell, Hood, Jones, Mayo, Miller, Saunders, Vogler, and Whittle (8)
NAY:	None (0)
ABSENT:	Buckner (1)

NEW BUSINESS

CONSIDERATION OF THE RELEASE OF CITY LIENS ON CHATHAM AVENUE

Council Member Vogler **moved** for adoption of a Resolution entitled:

RESOLUTION NO. 2025-04.01

A RESOLUTION APPROVING AND AUTHORIZING THE RELEASE OF CITY-HELD LIENS AGAINST REAL PROPERTY IDENTIFIED AS PARCEL #55564 ON CHATHAM AVENUE, TO

DRAFT

FACILITATE ITS DONATION TO THE DANVILLE NEIGHBORHOOD DEVELOPMENT CORPORATION.

The Motion was **seconded** by Council Member Saunders and carried the following vote:

VOTE:	7-0-1-1
AYE:	Campbell, Jones, Mayo, Miller, Saunders, Vogler, and Whittle (7)
NAY:	None (0)
ABSTAIN:	Hood (1)
ABSENT:	Buckner (1)

I, Bryant Hood, do hereby state that I have a conflict of interest regarding a Resolution Considering the Release of City Held Liens on Chatham Avenue, listed on the agenda under New Business Item A. Therefore, pursuant to the State and Local Government Conflict of Interest Act, Virginia Code § 2.2-3112, I must abstain from voting on this agenda item.

Witness my signature this 1st day of April, 2025.

s/Bryant Hood

CONSIDERATION OF AMENDING THE FISCAL YEAR 2024-2025 BUDGET APPROPRIATION ORDINANCE FOR GRANT FUNDS FROM THE US DEPARTMENT OF HOUSING AND URBAN DEVELOPMENT.

Upon **Motion** by Council Member Vogler and **second** by Council Member Campbell an Ordinance entitled:

ORDINANCE NO. 2025-04.01

AN ORDINANCE AMENDING THE FISCAL YEAR 2025 BUDGET APPROPRIATION ORDINANCE FOR PROJECTS TO BE OR BEING UNDERTAKEN TO IMPROVE THE DANVILLE COMMUNITY FINANCED WITH COMMUNITY DEVELOPMENT BLOCK GRANT, HOME INVESTMENT PARTNERSHIP FUNDS FROM THE U.S. DEPARTMENT OF HOUSING AND URBAN DEVELOPMENT, AND ESTIMATED PROGRAM INCOME FOR A TOTAL APPROPRIATION OF $1,186,687.

was presented by its **First Reading**, as required by City Charter, to lie over before final adoption.

COMMUNICATIONS FROM VISITORS

No one signed up to speak.

COMMUNICATIONS

City Manager Ken Larking noted that the City of Danville's PLAN Danville effort won an award at the American Planning Association meeting in Denver, Colorado; they received a perfect score for sustainability. Mr. Larking congratulated everyone involved in the PLAN Danville effort; it took the resources allocated by the City Council to be able to do that plan. They also received a grant from DRF, and it also took staff and community members who participated to make the Plan as great as it was.

DRAFT

There were no communications from the Deputy City Manager, Deputy City Attorney or City Clerk.

Council Member Hood congratulated the PLAN Danville team and wished Lonnie Jones a happy birthday.

Council Member Mayo spoke about the opportunity he had today to go into the Danville City Jail with Ashtyn Foddrell to speak to the inmates in the IDDU program, which partners with Virginia Cares. It was a unique program to help those citizens who have fallen by the wayside and trying to get back into being productive members of society. There were young men who will be graduating on 4/15 and he will be there.

Council Member Miller noted the City's staff was awesome, winning another award with PLAN Danville. Dr. Miller noted a few weeks ago the School Board invited Council over to their strategic planning; they broke up into groups and got input from Council and citizens on improving the schools. Dr. Miller noted they toured some of the new facilities, including the new kitchen area, to train chefs in the culinary arts.

Council Member Vogler congratulated the PLAN Danville team for their award. Mr. Vogler asked Lonnie Jones to come forward, sang happy birthday to him, and wished his daughter, Ava, an early happy birthday.

Council Member Whittle congratulated the PLAN Danville team for all their hard work. Mr. Whittle noted he went to G.W. today, met with the principal and walked around; he visited the auto mechanic program, and stated the welding program has increased in the past year or two.

Council Member Campbell noted he appreciated Mr. Mayo's comments on Virginia CARES, assisting people to have a good quality of life and community. Rev Campbell wished Lonnie Jones a happy birthday.

Mayor Jones thanked Alan Spencer for filling in for City Attorney Clarke Whitfield; he appreciated the work he does in the City, and congratulated the PLAN Danville team and the citizens that have been supportive of their efforts.

The meeting was adjourned at 7:15 pm.

APPROVED:

_____
MAYOR

ATTEST:

_____
CITY CLERK

DRAFT

Council Letter
City of Danville, Virginia

CL - 1960 **CONSENT AGENDA B.**

City Council REGULAR MEETING

Meeting Date: May 6, 2025

Subject: Consideration of Amending the Fiscal Year 2025 Budget Appropriation Ordinance for a Grant and Loan from the Virginia Tobacco Region and Revitalization Commission.

From: Jason Grey, Director of Utilities

COUNCIL ACTION

An Ordinance Amending the Fiscal Year 2025 Budget Appropriation Ordinance to Provide for a Virginia Tobacco Region and Revitalization Commission $750,000 Grant and $750,000 Loan to Assist with the City's Mount Cross Road Battery Energy Storage System.

Final Adoption

SUMMARY

In September, 2024, the City was awarded a $750,000 grant and a $750,000 loan from the Virginia Tobacco Region and Revitalization Commission as part of their Energy Ingenuity Fund. These funds will be used to lower the cost of the 11-megawatt Mount Cross Road Battery Energy Storage System. This project should be completed in spring 2026.

BACKGROUND

Danville Utilities is evaluating various cost-saving measures to lower rising electric demand costs. The 864 Monument Street battery energy storage system (BESS) has been used to discharge stored energy during winter and summer peak hours and help lower Danville Utilities electric ratepayer's costs. The proposed 11-megawatt BESS at 900 Mount Cross Road project is intended to provide the same benefit as the 864 Monument Street BESS. City staff became aware of the Virginia TRRC's Energy Ingenuity Fund, which aligned with the City's energy goals. In September 2024, the City was awarded a $750,000 grant and $750,000 loan to assist with the development of the 900 Mount Cross Road 11-megawatt BESS.

RECOMMENDATION

It is recommended that City Council approve the attached Ordinance amending the fiscal year 2025 budget appropriation ordinance by increasing revenue for grant funds received from the Virginia Tobacco Region and Revitalization Commission.

Attachments

1. Ordinance

PRESENTED: _____

ADOPTED: _____

ORDINANCE NO. 2025___.___

AN ORDINANCE AMENDING THE FISCAL YEAR 2025 BUDGET APPROPRIATION ORDINANCE TO PROVIDE FOR A VIRGINIA TOBACCO REGION AND REVITALIZATION COMMISSION $750,000 GRANT AND $750,000 LOAN TO ASSIST WITH THE CITY'S MOUNT CROSS ROAD BATTERY ENERGY STORAGE SYSTEM.

NOW THEREFORE, BE IT ORDAINED by the Council of the City of Danville, Virginia, that the Fiscal Year 2025 Budget Appropriation Ordinance be, and the same is hereby, amended by increasing revenues for in the amount of $1,500,000 from the Virginia Tobacco Region and Revitalization Commission in the form of a $750,000 grant and $750,000 loan, such funds to be appropriated in the Utility Electric Capital Project fund as follows:

ANTICIPATED REVENUES

Description	Account No.	Amount
Mount Cross Battery Energy Storage System Project		
Virginia Tobacco and Revitalization Commission:		
State Grant	62023000-46010	$750,000
Loan Proceeds	62023000-44045	$750,000
	TOTAL	$1,500,000

ANTICIPATED EXPENDITURES

Description	Account No.	Amount
Mount Cross Battery Energy Storage System Project	62023999-50	$ 1,500,000

AND BE IT FURTHER ORDAINED that this appropriation shall be a continuing appropriation and shall carry forward from year to year until expended for the purpose for which appropriated; and

BE IT FINALLY ORDAINED, that all other accounts and provisions of the Fiscal Year 2025 Budget Appropriation Ordinance, as amended, not hereby amended, shall continue in full force and effect unless and until hereafter further amended or repealed.

Approved:

_____
Mayor

Attest:

_____
City CLERK

Approved as to
Form and Legal Sufficiency:

_____
City Attorney

Council Letter
City of Danville, Virginia

CL - 1986 **CONSENT AGENDA C.**

City Council REGULAR MEETING

Meeting Date: May 6, 2025

Subject: Support to the Neighbors Helping Neighbors Program.

From: Henrietta Weaver, Budget Director

COUNCIL ACTION

An Ordinance Amending the Fiscal Year 2025 Budget Appropriation Ordinance by Increasing Revenues from the Casino Gaming Taxes to Provide Support to Neighbors Helping Neighbors in the Amount of $200,000 and Appropriating the Same.

Final Adoption

SUMMARY

Revenues from casino gaming taxes are anticipated to exceed previously budgeted amounts. The additional revenues will be used to provide support to the Neighbors Helping Neighbors program in the amount of $200,000.

BACKGROUND

The City's Fiscal Year 2025 Budget Appropriation Ordinance includes estimates for casino gaming taxes using the best available information. Casino gaming taxes are on trend to exceed fiscal year estimates. The program/projects intended to be funded by the increased revenues are one-time type expenditures, since the revenue derived from this funding source is highly contingent on the state of the economy.

Funding for Neighbors Helping Neighbors comes from public donations and grants. The program provides financial assistance to residents experiencing financial hardships by helping them avoid utility service disconnections or restoring disconnected services. Typically, this program has about $40,000 per year to provide assistance. Adding $200,000 will help significantly more people in need.

RECOMMENDATION

It is recommended that the City Council adopt the attached ordinance amending the Fiscal Year 2025 Budget Appropriation Ordinance.

Attachments

1. Ordinance

PRESENTED: _____

ADOPTED: _____

ORDINANCE NO. 2025 -____.____

AN ORDINANCE AMENDING THE FISCAL YEAR 2025 BUDGET APPROPRIATION ORDINANCE BY INCREASING REVENUES FROM THE CASINO GAMING TAXES TO PROVIDE SUPPORT TO NEIGHBORS HELPING NEIGHBORS IN THE AMOUNT OF $200,000 AND APPROPRIATING THE SAME.

WHEREAS, the City anticipates receiving excess revenues from casino gaming operations exceeding the original budget estimate for Fiscal Year 2025; and

WHEREAS, Neighbors Helping Neighbors is an energy assistance program in collaboration with the United Way of Danville-Pittsylvania County; and

WHEREAS, City Council desires to allocate a portion of excess casino revenues to further support the Neighbors Helping Neighbors program in accordance with existing program rules and guidelines; and

WHEREAS, the funds appropriated by this ordinance shall be administered in the same manner as all other donations to the Neighbors Helping Neighbors program; and

NOW THEREFORE, BE IT ORDAINED, by the Council of the City of Danville, Virginia, that the Fiscal Year 2025 Budget Appropriation Ordinance be, and the same hereby is, amended, by increasing revenues in the General Fund and appropriating same to be as follows:

ANTICIPATED REVENUES

Description	Account No.	Amount
Caesar's Minimum Gaming Fee	0100000-40580	$ 200,000

ANTICIPATED EXPENDITURES

Description	Account No.	Amount
Support of Other Entities Neighbors Helping Neighbors	0111505-55005	$ 200,000

AND BE IT FINALLY ORDAINED, that all other accounts and provisions of the Fiscal Year 2025 Budget Appropriation Ordinance, as amended, not hereby amended, shall continue in full force and effect unless and until hereafter further amended or repealed.

Approved:

_____
Mayor

Attest:

_____
City Clerk

Approved as to
Form and Legal Sufficiency:

_____
Deputy City Attorney

Council Letter
City of Danville, Virginia

CL - 1987 **CONSENT AGENDA D.**

City Council REGULAR MEETING

Meeting Date: May 6, 2025

Subject: Consideration of Funding a One-Year Utility Customer Credit.

From: Henrietta Weaver, Budget Director

COUNCIL ACTION

An Ordinance Amending the Fiscal Year 2025 Budget Appropriation Ordinance to Fund a One-Year Utility Customer Credit Using Excess Casino Gaming Taxes in an Amount Not to Exceed $2,400,000 and Appropriating Same.

Final Adoption

SUMMARY

Revenues from casino gaming taxes are anticipated to exceed previously budgeted amounts. The additional revenues will be used to fund a one-year monthly utility customer credit for residents of Danville.

BACKGROUND

The City's Fiscal Year 2025 Budget Appropriation Ordinance includes estimates for casino gaming taxes using the best available information. Casino gaming taxes are on trend to exceed fiscal year estimates. The program/projects intended to be funded by the increased revenues are one-time type expenditures, since the revenue derived from this funding source is highly contingent on the state of the economy. The funding will provide about a $10 per month credit on every City residential customer's utility bill. This credit only occurs if the City Council adopts the rate consultant's recommendations for rate adjustments that were approved by the Utility Commission.

RECOMMENDATION

It is recommended that the City Council adopt the attached ordinance amending the Fiscal Year 2025 Budget Appropriation Ordinance.

Attachments

1. Ordinance

RESENTED: _____

ADOPTED: _____

ORDINANCE NO. 2025___.___

AN ORDINANCE AMENDING THE FISCAL YEAR 2025 BUDGET APPROPRIATION ORDINANCE TO FUND A ONE-YEAR UTILITY CUSTOMER CREDIT USING EXCESS CASINO GAMING TAXES IN AN AMOUNT NOT TO EXCEED $2,400,000 AND APPROPRIATING SAME.

WHEREAS, the City anticipates receiving excess revenues from casino gaming operations exceeding the original budget estimate for Fiscal Year 2025; and

WHEREAS, the City's biennial utility rate study has recommended utility rate increases to ensure the financial sustainability of the utility system and continued investment in infrastructure and service improvements; and

WHEREAS, a monthly credit can be provided to City residential utility customers for one year beginning with July/August 2025 bills, funded exclusively from excess casino revenue and shall not impact the general fund or other dedicated revenue sources; and

WHEREAS, the provision of the monthly City residential utility customer credit is contingent upon City Council adoption of the rate recommendations per the 2025 biennial utility rate study.

NOW THEREFORE, BE IT ORDAINED by the City Council of the City of Danville, Virginia, that the Fiscal Year 2025 budget is hereby amended as follows:

ANTICIPATED REVENUE

Description	Account No.	Amount
Caesar's Minimum Gaming Fee	0100000-40580	$ 1,150,000
Casino Gaming Tax Local Share	0100000-40585	1,250,000
	TOTAL	$ 2,400,000

ANTICIPATED EXPENDITURES

Description	Account No.	Amount
Support of / Transfer to / Utility Funds:		
Transfer Out to Wastewater Fund	0199509-6051	$ 235,610
Transfer Out to Water Fund	0199509-6052	164,440
Transfer Out to Gas Fund	0199509-6053	461,840
Transfer Out to Electric Fund	0199509-6054	1,538,110
	TOTAL	$ 2,400,000

AND BE IT FURTHER ORDAINED, by the Council of the City of Danville, Virginia, that the Fiscal Year 2025 Budget Appropriation Ordinance be, and the same hereby is, amended, by providing funding in the Wastewater Fund as follows:

ANTICIPATED REVENUE

Description	Account No.	Amount
Transfer In From General Fund	5100000-6101	$ 235,610
Customer Credits	5100000-42725	($ 235,610)

AND BE IT FURTHER ORDAINED, by the Council of the City of Danville, Virginia, that the Fiscal Year 2025 Budget Appropriation Ordinance be, and the same hereby is, amended, by providing funding in the Water Fund as follows:

ANTICIPATED REVENUE

Description	Account No.	Amount
Transfer In From General Fund	5200000-6101	$ 164,440
Customer Credits	5200000-42725	($ 164,440)

BE IT FURTHER ORDAINED, by the Council of the City of Danville, Virginia, that the Fiscal Year 2025 Budget Appropriation Ordinance be, and the same hereby is, amended, by providing funding in the Gas Fund as follows:

ANTICIPATED REVENUE

Description	Account No.	Amount
Transfer In From General Fund	5300000-6101	$ 461,840
Customer Credits	5300000-42725	($ 461,840)

AND BE IT FURTHER ORDAINED, by the Council of the City of Danville, Virginia, that the Fiscal Year 2025 Budget Appropriation Ordinance be, and the same hereby is, amended, by providing funding in the Electric Fund as follows:

ANTICIPATED REVENUE

Description	Account No.	Amount
Transfer In From General Fund	5400000-6101	$ 1,538,110
Customer Credits	5400000-42725	($ 1,538,110)

AND BE IT FINALLY ORDAINED, that all other accounts and provisions of the Fiscal Year 2025 Budget Appropriation Ordinance, as amended, not hereby amended, shall continue in full force and effect unless and until hereafter further amended or repealed.

APPROVED:

_____
MAYOR

ATTEST:

_____
CLERK

Approved as to
Form and Legal Sufficiency:

_____
Deputy City Attorney

Council Letter
City of Danville, Virginia

CL - 1988 **CONSENT AGENDA E.**

City Council REGULAR MEETING

Meeting Date: May 6, 2025

Subject: Funding the City Residential HVAC/Insulation Project.

From: Henrietta Weaver, Budget Director

COUNCIL ACTION

An Ordinance Amending the Fiscal Year 2025 Budget Appropriation Ordinance by Increasing Revenues from Casino Gaming Taxes to Fund a City Residential HVAC/Insulation Project in the Amount of $500,000 and Appropriating Same.

Final Adoption

SUMMARY

Revenues from casino gaming taxes are anticipated to exceed previously budgeted amounts. The additional revenues will be used to fund the City Residential Energy Efficiency Program for a total amount of $500,000.

BACKGROUND

The City's Fiscal Year 2025 Budget Appropriation Ordinance includes estimates for casino gaming taxes using the best available information. Casino gaming taxes are on trend to exceed fiscal year estimates. The program/projects intended to be funded by the increased revenues are one-time type expenditures, since the revenue derived from this funding source is highly contingent on the state of the economy. The Energy Efficiency Program will provide assistance to residential customers to make their homes more energy efficient, thus reducing the amount of electricity usage, which will lower their utility bills. A similar program utilizing American Rescue Plan Act funds helped to lower the average electric bill for about 65 customers after the improvements were made to their homes.

RECOMMENDATION

It is recommended that the City Council adopt the attached ordinance Amending the Fiscal Year 2025 Budget Appropriation Ordinance.

Attachments

1. Ordinance

PRESENTED: _____

ADOPTED: _____

ORDINANCE NO. 2025___.___

AN ORDINANCE AMENDING THE FISCAL YEAR 2025 BUDGET APPROPRIATION ORDINANCE BY INCREASING REVENUES FROM CASINO GAMING TAXES TO FUND AN CITY RESIDENTIAL HVAC/INSULATION PROJECT IN THE AMOUNT OF $500,000 AND APPROPRIATING SAME.

WHEREAS, the City anticipates receiving excess revenues from casino gaming operations exceeding the original budget estimate for Fiscal Year 2025; and

WHEREAS, the City Council recognizes the need to fund a City Residential HVAC/Insulation Project to reduce energy consumption, lower utility costs, and promote sustainable practices within City facilities and the community; and

WHEREAS, it is necessary to amend the Fiscal Year 2025 budget to appropriate these excess casino revenues for the implementation of the City Residential HVAC/Insulation Project; and

WHEREAS, the effective date of this program is July 1, 2025; and

WHEREAS, the funds appropriated shall be used for the development and implementation of the City Residential HVAC/Insulation Project, which may include, HVAC system improvements, insulation replacement, and community energy conservation initiatives. The City Manager or designee shall oversee the program's execution and ensure funds are used in accordance with applicable laws and regulations.

NOW THEREFORE, BE IT ORDAINED by the City Council of the City of Danville, Virginia, that the Fiscal Year 2025 budget is hereby amended as follows:

ANTICIPATED REVENUE

Description	Account No.	Amount
Caesar's Minimum Gaming Fee	0100000-40580	$ 250,000
Casino Gaming Tax Local Share	0100000-40585	250,000
	TOTAL	$ 500,000

ANTICIPATED EXPENDITURES

Description	Account No.	Amount
Support of / Transfer to / Utility Funds: Transfer Out to Electric Fund	0199509-6054	$ 500,000

ANDBE IT FURTHER ORDAINED, by the Council of the City of Danville, Virginia, that the Fiscal Year 2025 Budget Appropriation Ordinance be, and the same hereby is, amended, by providing funding in the Electric Fund and appropriating same to be as follows:

ANTICIPATED REVENUES

Description	Account No.	Amount
City Residential HVAC/Insulation Project Transfer In from General Fund	62038000-6101	$ 500,000

ANTICIPATED EXPENDITURES

Description	Account No.	Amount
City Residential HVAC/Insulation Project	62038999-50	$ 500,000

AND BE IT FURTHER ORDAINED that this appropriation shall be a continuing appropriation and shall carry forward from year to year until expended for the purpose for which appropriated; and

BE IT FINALLY ORDAINED, that all other accounts and provisions of the Fiscal Year 2025 Budget Appropriation Ordinance, as amended, not hereby amended, shall continue in full force and effect unless and until hereafter further amended or repealed.

Approved:

_____
Mayor

Attest:

_____
City Clerk

Approved as to
Form and Legal Sufficiency:

_____
Deputy City Attorney

Council Letter
City of Danville, Virginia

CL - 1992 **APPOINTMENTS A.**

City Council REGULAR MEETING

Meeting Date: May 6, 2025

Subject: Appointments to Boards and Commissions.

From: Susan DeMasi, City Clerk

COUNCIL ACTION

1. A Resolution appointing Lucius Chandler to fill an unexpired term on the Danville Redevelopment and Housing Authority.
2. A Resolution appointing Barry Mayo to fill an unexpired term on the Danville Redevelopment and Housing Authority.
3. A Resolution appointing Kristen Barker to the Danville Development Authority for a term ending November 20, 2025.
4. A Resolution appointing James Bebeau to the Danville Development Authority for a term ending November 20, 2026.
5. A Resolution appointing John Laramore to the Danville Development Authority for a term ending November 20, 2026.
6. A Resolution appointing Philip Hall to the Danville Development Authority for a term ending November 20, 2026.
7. A Resolution appointing Robert Woodall to the Danville Development Authority for a term ending November 20, 2026.
8. A Resolution appointing Russell Reynold to the Danville Development Authority for a term ending November 20, 2028.
9. A Resolution appointing T. Neal Morris to the Danville Development Authority for a term ending November 20, 2028.

Attachments

1. Resolutions

PRESENTED: _____

ADOPTED: _____

RESOLUTION NO. 2025 –____.____

A RESOLUTION APPOINTING LUCIUS CHANDLER TO THE DANVILLE REDEVELOPMENT AND HOUSING AUTHORITY TO FILL AN UNEXPIRED TERM.

BE IT RESOLVED by the Council of the City of Danville, Virginia, that Lucius Chandler be, and he is hereby appointed as a member of the Danville Redevelopment and Housing Authority to fill the unexpired term of Larry Toomer ending October 31, 2027.

APPROVED:

_____
MAYOR

ATTEST:

_____
CITY CLERK

PRESENTED: _____

ADOPTED: _____

RESOLUTION NO. 2025 –____.____

A RESOLUTION APPOINTING BARRY MAYO TO THE DANVILLE REDEVELOPMENT AND HOUSING AUTHORITY TO FILL AN UNEXPIRED TERM.

BE IT RESOLVED by the Council of the City of Danville, Virginia, that Barry Mayo be, and he is hereby appointed as a member of the Danville Redevelopment and Housing Authority to fill the unexpired term of Alonzo L. Jones ending October 31, 2025.

.

APPROVED:

_____
MAYOR

ATTEST:

_____
CITY CLERK

PRESENTED: _____

ADOPTED: _____

RESOLUTION NO. 2025 –____.____

A RESOLUTION APPOINTING KRISTEN BARKER TO THE DANVILLE DEVELOPMENT AUTHORITY.

BE IT RESOLVED by the Council of the City of Danville, Virginia, that Kristen Barker be, and she is hereby appointed as a member of the Danville Development Authority to serve an initial term beginning May 1, 2025 and ending November 20, 2025.

.

APPROVED:

_____
MAYOR

ATTEST:

_____
CITY CLERK

PRESENTED: _____

ADOPTED: _____

RESOLUTION NO. 2025 –____.____

A RESOLUTION APPOINTING JAMES BEBEAU TO THE DANVILLE DEVELOPMENT AUTHORITY.

BE IT RESOLVED by the Council of the City of Danville, Virginia, that James Bebeau be, and he is hereby appointed as a member of the Danville Development Authority to serve an initial term beginning May 1, 2025 and ending November 20, 2026.

.

APPROVED:

_____
MAYOR

ATTEST:

_____
CITY CLERK

PRESENTED: _____

ADOPTED: _____

RESOLUTION NO. 2025 –____.____

A RESOLUTION APPOINTING JOHN LARAMORE TO THE DANVILLE DEVELOPMENT AUTHORITY.

BE IT RESOLVED by the Council of the City of Danville, Virginia, that John Laramore be, and he is hereby appointed as a member of the Danville Development Authority to serve an initial term beginning May 1, 2025 and ending November 20, 2026.

.

APPROVED:

_____
MAYOR

ATTEST:

_____
CITY CLERK

PRESENTED: _____

ADOPTED: _____

RESOLUTION NO. 2025 –____.____

A RESOLUTION APPOINTING PHILIP HALL TO THE DANVILLE DEVELOPMENT AUTHORITY.

BE IT RESOLVED by the Council of the City of Danville, Virginia, that Philip Hall be, and he is hereby appointed as a member of the Danville Development Authority to serve an initial term beginning May 1, 2025 and ending November 20, 2026.

.

APPROVED:

_____
MAYOR

ATTEST:

_____
CITY CLERK

PRESENTED: _____

ADOPTED: _____

RESOLUTION NO. 2025 –____.____

A RESOLUTION APPOINTING ROBERT WOODALL TO THE DANVILLE DEVELOPMENT AUTHORITY.

BE IT RESOLVED by the Council of the City of Danville, Virginia, that Robert Woodall be, and he is hereby appointed as a member of the Danville Development Authority to serve an initial term beginning May 1, 2025 and ending November 20, 2026.

.

APPROVED:

_____
MAYOR

ATTEST:

_____
CITY CLERK

PRESENTED: _____

ADOPTED: _____

RESOLUTION NO. 2025 –____.____

A RESOLUTION APPOINTING RUSSELL REYNOLDS TO THE DANVILLE DEVELOPMENT AUTHORITY.

BE IT RESOLVED by the Council of the City of Danville, Virginia, that Russell Reynolds be, and he is hereby appointed as a member of the Danville Development Authority to serve an initial term beginning May 1, 2025 and ending November 20, 2028.

.

APPROVED:

_____
MAYOR

ATTEST:

_____
CITY CLERK

PRESENTED: _____

ADOPTED: _____

RESOLUTION NO. 2025 –____.____

A RESOLUTION APPOINTING T. NEAL MORRIS TO THE DANVILLE DEVELOPMENT AUTHORITY.

BE IT RESOLVED by the Council of the City of Danville, Virginia, that T. Neal Morris be, and he is hereby appointed as a member of the Danville Development Authority to serve an initial term beginning May 1, 2025 and ending November 20, 2028.

.

APPROVED:

_____
MAYOR

ATTEST:

_____
CITY CLERK

Council Letter
City of Danville, Virginia

CL - 1952 **NEW BUSINESS A.**

City Council REGULAR MEETING

Meeting Date: May 6, 2025

Subject: Special Use Permit Application at 119 Cane Creek Boulevard.

From: Renee Burton, Division Director of Planning

COUNCIL ACTION

1. Public Hearing

2. An Ordinance Granting Special Use Permit Application PZ25- 00160, filed by Kare Partners, LLC, Requesting a Special Use Permit to Allow Uses by Right and by Special Use Permit in the HR-C Highway Retail Commercial Zoning District (Child Therapeutic Day Support Services) at Parcel 77074 (119 Cane Creek Boulevard) in Accordance with Article 3.O., Section C., Item 15.

SUMMARY

Kare Partners, LLC has filed a request for a Special Use Permit that would allow the operation of child therapeutic day support services at 119 Cane Creek Boulevard, zoned LED-I. Kare Partners, LLC owns and operates Compleat KiDZ, a therapeutic day support program for children. Compleat KiDZ currently has nineteen (19) locations throughout North Carolina and southern Virginia. Operations at the Danville location will begin care of 25 children with plans to expand to 150 children within the first year. Sessions will be offered at 8:00 am, 1:00 pm, 3:30 pm and 6:30 pm and will last 1.5 hours. Within five years, Compleat KiDZ will create 200 jobs.

Child therapeutic day support services are not permitted by right in the LED-I Light Economic Development Industrial zoning classification. However, Item 15 of the Uses Permitted by Special Use Permit allows for "uses permitted by right and by special use permit in the HR-C District," where child therapeutic day support services are permitted by right. The applicant has applied for a Special Use Permit for their operation in accordance with Article 3.O Section C Item 15.

The property has sufficient parking for the proposed use, and the existing signalized intersection negates the need for a traffic analysis study. This program will expand access to essential services for children and fill a need for the community.

Eleven (11) notices were sent to surrounding property owners within three hundred (300) feet of the subject property. No responses were received.

On March 10, 2025, the City Planning Commission voted 6-0 to recommend approval of Special Use Permit PZ25-00160 to allow uses permitted by right and by Special Use Permit in the HR-C Highway Retail Commercial district (child therapeutic day support services) in accordance with Article 3.O Section C Item 15 at Parcel 77074 (119 Cane Creek Boulevard).

119 Cane Creek Boulevard is located within the Airside Industrial Park. Any uses proposed within the Airside Industrial Park must be reviewed by the Airside Review Committee for compliance with Article 4 (attached) of the Protective Covenants of the Airside Industrial Park. The request for approval was reviewed during the April 7th meeting; the request was postponed. Discussion by the Airside Review Committee included the potential of removing 119 Cane Creek Boulevard from Airside Industrial Park. The operation and/or the removal of the property from the Industrial Park must comply with the Protective Covenants of the Airside Industrial Park.

RECOMMENDATION

It is recommended that City Council adopt an Ordinance to grant a Special Use Permit to allow uses permitted by right and by special use permit in the HR-C Highway Retail Commercial zoning district (Child Therapeutic Day Support Services) in accordance with Article 3.O Section C Item 15 at Parcel 77074 (119 Cane Creek Boulevard) with the following conditions:

1. The operation of a child therapeutic day support service complies with the Protective Covenants of the Airside Industrial Park.

Attachments

1. Ordinance
2. Special Use Permit Application - 119 Cane Creek Blvd
3. Contract for 119 Cane Creek Blvd
4. Protective Covenants - Airside
5. 119 Cane Creek Blvd Aerials Map
6. 119 Cane Creek Blvd Owners Zoning Map
7. Planning Commission Recommendation

PRESENTED:_____

ADOPTED: _____

ORDINANCE NO. 2025____.____

AN ORDINANCE GRANTING SPECIAL USE PERMIT APPLICATION PZ25-00160, FILED BY KARE PARTNERS, LLC, REQUESTING A SPECIAL USE PERMIT TO ALLOW USES BY RIGHT AND BY SPECIAL USE PERMIT IN THE HR-C HIGHWAY RETAIL COMMERCIAL ZONING DISTRICT (CHILD THERAPEUTIC DAY SUPPORT SERVICES) AT PARCEL 77074 (119 CANE CREEK BOULEVARD) IN ACCORDANCE WITH ARTICLE 3.O., SECTION C., ITEM 15.

NOW THEREFORE, BE IT ORDAINED, by the Council of the City of Danville, Virginia, that the report of the Planning Commission recommending approval of Special Use Permit Application PZ25-00160, filed by Kare Partners, LLC, requesting a Special Use Permit to allow uses by right and by Special Use Permit in the HR-C Highway Retail Commercial zoning district (Child Therapeutic Day Support Services) at Parcel ID 77074 (119 Cane Creek Boulevard) in accordance with Article 3.O., Section C., Item 15, be and the same is hereby received; and

BE IT FURTHER ORDAINED, that in consideration of said report and the public hearing this day held by Council, Special Use Permit Application PZ25-00160, filed by Kare Partners, LLC, requesting a Special Use Permit to allow uses by right and by Special Use Permit in the HR-C Highway Retail Commercial zoning district (Child Therapeutic Day Support Services) at Parcel ID 77074 (119 Cane Creek Boulevard) in accordance with Article 3.O., Section C., Item 15, is hereby granted and approved, with the following conditions

1. The operation of a child therapeutic day support service complies with the Protective Covenants of the Airside Industrial Park.

2. Approved by the Airside Development Review Committee.

Approved:

_____
Mayor

Attest:

_____
City Clerk

Approved as to
Form and Legal Sufficiency:

_____
City Attorney

CITY OF DANVILLE
Community Development
Division of Planning and Zoning

SPECIAL USE PERMIT APPLICATION

Article 6. Section D. Application Requirements for Special Use Permit.

1. *An application for a special use permit shall be made by the owner, contract purchaser with the owner's written consent, or the owner's agent, of the property on which the proposed use is to be located. The application shall be submitted to the Director of Planning/Zoning Administrator and shall be accompanied by the filing fee of $400.00.*
2. *If the request for a special use permit has been denied by the City Council, a request in substantially the same form shall not be resubmitted within one (1) year of the date of denial.*

PLANNING DIVISION PROVIDED INFORMATION

Application #: _____ PC Meeting Date: _____

Date Received: _____ Received By: _____

Parcel ID: _____ Address: _____

ExistingZoning _____ Future Land Use: _____

APPLICANT PROVIDED INFORMATION

Property Location (address/ID#) 119 Cane Creek Blvd. Danville, Va 24540

Applicant: Adi Khindaria

Applicant's Address: 2675 Court Dr. Gastonia, NC 28054

Applicant's Phone Number: 704-678-4000

Applicant's E-mail: Adi@kareparfners.com

Applicant's Signature — February 5th, 2025 Date

PLEASE ATTACH THE FOLLOWING:

PLEASE ATTACH THE FOLLOWING:

1. A preliminary site plan in accordance with the Site Plan Regulations.
2. A description of the proposed use and, where applicable, the hours of operation and the proposed number of employees/patrons.
3. A written statement of proposed project compatibility with the following:
   A) The Comprehensive Plan.
   B) The applicable zoning district.
   C) The surrounding properties.
   D) Current and future neighborhood conditions.
   E) Pedestrian and vehicular traffic patterns, on-site and off-site.
   F) Adequate public facilities.

4. When requested by the Director of Planning/Zoning Administrator, the Planning Commission, or the City Council, the following information shall be provided by the applicant:
   A) The architectural elevations and floor plans of proposed building(s).
   B) Traffic impact analysis.
   C) Fiscal impact analysis.
   D) Parking and site circulation analysis.
   E) Photographs of property and surrounding area.
   F) Environmental impact statement.

Compleat KiDZ Special Use Application – Danville, VA

Introduction & Mission

Compleat KiDZ, which was founded in 1989, has been committed to supporting children with special needs since our CEO purchased the company in 2004. From the very beginning, our primary focus has been pediatric therapy, ensuring sustainable, high-quality care for children with autism and developmental delays.

Our ethos has always been to serve underserved communities, particularly in semi-urban and small-town settings. Danville is an ideal location for expansion, as it currently does not have an ABA therapy clinic. Several parents from Danville and northern North Carolina have reached out to us requesting a clinic, highlighting a strong need for these services.

Compleat KiDZ is proud to be the largest pediatric therapy provider in North Carolina, and we are now expanding to meet the growing demand for ABA therapy in Virginia.

Planned Services & Operations

When we open our doors in Danville, we will initially serve 25 children and their families, with plans to expand to 150 children within the first year. To best accommodate our families, we will offer **individualized** therapy sessions, structured as follows:

- **Two to three therapy sessions per child per day**
- **Each session lasts 1.5 hours**
- Parents will drop off and pick up their children at designated times: **8:00 AM, 1:00 PM, 3:30 PM, and 6:30 PM**
- **No parents are required to stay on-site**, significantly reducing parking needs

Employment & Economic Impact

Compleat KiDZ is committed to being a long-term partner in Danville, with a **minimum 15-year commitment** to the community. Within the first five years, the clinic will create over **200 jobs**, with **90% of positions being clinical roles**. Job opportunities and average salaries include:

- **Behavior Technicians** – $22.50 per hour
- **Board Certified Behavior Analysts (BCBAs)** – $120,000 per year
- **Licensed Psychologists** – $150,000 per year
- **Administrative Personnel** – $75,000 per year

We will actively collaborate with **local schools and special needs organizations** to ensure ongoing community engagement and support.

Insurance & Accessibility

To ensure affordability and access to care, Compleat KiDZ has **contracted with all commercial insurers in Virginia**, with our **Medicaid contract currently in progress**.

Community Testimonials & Impact

We encourage stakeholders to hear directly from families whose lives have been transformed by our services. Click here : https://www.youtube.com/watch?v=7qyqYi7_chA

Our expansion into Danville will not only bring specialized care to children with special needs but will also strengthen the local economy and create meaningful employment opportunities.

FOR SALE/LEASE

119 Cane Creek Blvd

Danville, VA

Gray Randolph, SIOR
Executive Vice President, Principal, Associate Broker
+1 757 228 1817
gray.randolph@colliers.com

John Laramore
Wilkins & Co. Realtors/Commercial
+1 434 797 4007
+1 434 489 8200
johnlaramore@icloud.com

Colliers
Accelerating success.

Power Specifications

The DVRO Facility is fed by a 480 / 277 volt, 3-phase, 4-wire power company service. The power company is Danville Electric, and the meter number is 09000164. The maximum demand for the building, as reported by the power company, is 822 kW (900 amperes). The service feeds a 480 / 277 volt, 3-phase, 4-wire main distribution switchboard in the electrical room. It is an Eaton Pow-R-Line C switchboard rated 2000 amperes.

Features & Specifications

- ±50,652 RSF
- 9.76 acres
- LED-I Zoning
- Industrial use may be possible
- Former call center
- Parking ±450 spaces
- 10 minutes to Downtown Danville
- Possible grants and incentives
- Rubber membrane roof
- Wet sprinkler system
- 26 foot max and 21 foot minimum ceiling heights

Basic Lease Rate

$8 PSF, NNN

Sale Price

$3.5 M

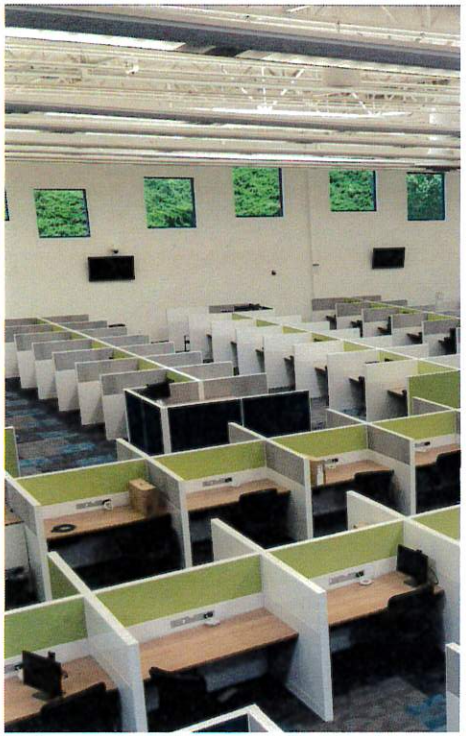

Grant & Incentive Opportunities

- Commonwealth Opportunity Fund
- Tobacco Region Opportunity Fund (TROF)
- Virginia Enterprise Zone Job Creation Grant
- Virginia Enterprise Zone - Real Property Investment Grant
- Virginia Jobs Investment Program (VJIP)
- Rail Industrial Access Program
- Commercial & Industrial Sales & Use Tax Exemption
- City of Danville Enterprise Zone Incentives
- Danville Industrial Enhancement Grant
- New Market Tax Credits Program (NMTC)

Location & Access

Colliers

150 West Main Street
Suite 1100
Norfolk, VA 23510
Main: +1 490 3300
colliers.com/norfolk

Gray Randolph, SIOR
Executive Vice President, Principal, Associate Broker
+1 757 228 1817
gray.randolph@colliers.com

John Laramore
Wilkins & Co. Realtors/Commercial
+1 434 797 4007
+1 434 489 8200
johnlaramore@icloud.com

This document has been prepared by Colliers International for advertising and general information only. Colliers International makes no guarantees, representations or warranties of any kind, expressed or implied, regarding the information including, but not limited to, warranties of content, accuracy and reliability. Any interested party should undertake their own inquiries as to the accuracy of the information. Colliers International excludes unequivocally all inferred or implied terms, conditions and warranties arising out of this document and excludes all liability for loss and damages arising there from. This publication is the copyrighted property of Colliers International Virginia, LLC and/or its licensor(s). ©2024. All rights reserved.

119 Cane Creek Blvd

Warehouse - Virginia South Central Submarket
Danville, VA 24540

50,652	425,146	2004	50,652	$0.67/NNN	$3.5M	$69.10
SF RBA	SF Lot	Built	Available SF	Asking Office Rent	Sale Price	Price/SF

Sale

For Sale	$3,500,000 ($69.10/SF)		
Sale Type	Investment or Owner User	Status	Active
Sold Price	$6,125,000 ($120.92/SF)		
Date	Sep 2019		
Sale Type	Investment		
Financing	Down Payment of $3,231,754 (52.76%) 1st Mortgage Bal/Pmt: $2,893,633/-		

Building

Type	3 Star Industrial Warehouse		
RBA	50,652 SF	Tenancy	Multi
Stories	1	Owner Occup	No
Typical Floor	50,652 SF		
Class	B		
Docks	None	Clear Height	24'
Drive Ins	None	Rail Spots	None
Levelers	None		

Construction Event	Date
Year Built	2004

CoStar Est. Rent	$0.63/SF (Industrial)
Walk Score®	Car-Dependent (4)
Parking Ratio	8.88/1,000 SF

Parking Type	Spaces
Surface	450

Land

Land SF	425,146 SF	Land Acres	9.76 AC
Bldg FAR	0.12		
Zoning	LED-I		

For Lease

Smallest Space	50,652 SF	Office Avail	50,652 SF
Max Contiguous	50,652 SF		
# of Spaces	1		
Vacant	50,652 SF		
% Leased	0%		
Rent	$0.67		
Service Type	Triple Net		

Space

Floor	Available	Use	Rent	Services
E 1st	50,652 SF	Office	$0.67	NNN

Market Conditions

Vacancy Rates	Current	YOY Change
Subject Property	100.0%	0.0%
Market Overall	12.3%	7.7%
Market Asking Rent Per Area		
Subject Property	$0.67/SF	4.5%
Market Overall	$0.58/SF	4.2%
Submarket Leasing Activity		
12 Mo. Leased	1,226,784 SF	-4.6%

Property Contacts

True Owner	PRA Group, Inc.
Recorded Owner	PRA Holding VII LLC
Owner Type	Individual
Primary Leasing	Colliers | Virginia
Sale Broker	Colliers | Virginia

About the Owner

PRA Group, Inc.
150 Corporate Blvd
Norfolk, VA 23502
United States
(800) 772-1413 (p)
ir.pragroup.com
Since Sep 23, 2019

In 1996, Steve Fredrickson and Kevin Stevenson had a vision for a professional business in the nonperforming loan industry. With four employees in Norfolk, Virginia, they set out to found a company that would do things differently. Things like helping improve financial futures by taking a customer-first approach, providing affordable and flexible payment options, meeting high levels of compliance and reliability, and creating rewarding careers for employees. They took Portfolio Recovery Associates, Inc. public in November 2002 and changed the parent company name to PRA Group, Inc. in October 2014. Today, PRA Group has grown to become a global leader in the nonperforming loan industry with operations and thousands of employees around the world. Nearly three decades since their founding, they remain focused on doing things the right way, for the right reasons, for the long term.

Public Transportation

Commuter Rail	Drive	Distance
Danville Amtrak Station (Crescent - Amtrak)	9 min	5.2 mi

Documents

For Sale

- 119 Cane Creek Flyer
- Danville ED Property Information

Property

- 119 Cane Creek Flyer
- Danville ED Property Information
- Marketing Brochure/Flyer

Public Record

2024 Assessment

Improvements	$3,474,000	$8.17/SF	
Land	$97,600	$0.23/SF	
Total Value	$3,571,600	$8.40/SF	58% of last sale

Parcels 77074

Demographics

	1 mile	3 miles
Population	585	4,419
Households	278	2,022
Median Age	47.40	45.90
Median HH Income	$41,750	$41,610
Daytime Employees	890	2,770
Population Growth '24 - '29	-2.05%	-1.81%
Household Growth '24 - '29	-2.16%	-1.88%

Traffic

Collection Street	Cross Street	Traffic Vol	Last Measur...	Distance
Ringgold Road	S Boston Rd S	1,887	2022	0.46 mi
Ringgold Rd	S Boston Rd S	2,031	2022	0.46 mi
South Boston Road	S Boston Rd E	20,117	2022	0.51 mi
S Boston Rd	Mountain Hill Rd E	21,738	2022	0.51 mi
South Boston Road	Mountain Hill Rd E	20,117	2022	0.51 mi
Tom Fork Road	Cane Creek Pkwy W	282	2022	0.51 mi
Ringgold Road	Tom Fork Rd N	1,994	2022	0.54 mi
Ringgold Rd	Tom Fork Rd N	1,991	2022	0.54 mi
S Boston Hwy	Gunn Garland Rd E	12,523	2022	0.56 mi
South Boston Highway	Gunn Garland Rd E	11,994	2022	0.56 mi

Made with TrafficMetrix® Products

Location

Postcode	24540
Submarket	Virginia South Central
Submarket Cluster	Virginia Area
Market	Other Market Areas
County	Danville City
State	Virginia
CBSA	Danville, VA
DMA	Roanoke-Lynchburg, VA-WV
Country	United States

Flood Risk

Flood Risk Area	Moderate to Low Risk Areas
FEMA Flood Zone	B and X Area of moderate flood hazard, usually the area between the limits of the 100-year and 500-year floods.
Floodplain Area	100-year and 500-year
In SFHA	No
FEMA Map Identifier	51143C0654E
FIRM ID	51143C
FIRM Panel Number	0654E
FEMA Map Date	Sep 29, 2010

Flood risk is determined by the footprint of the parcel rather than the footprint of the property.

Property ID: 11233167

Images

Primary Photo

Interior Photo

EXHIBIT A

Property Depiction

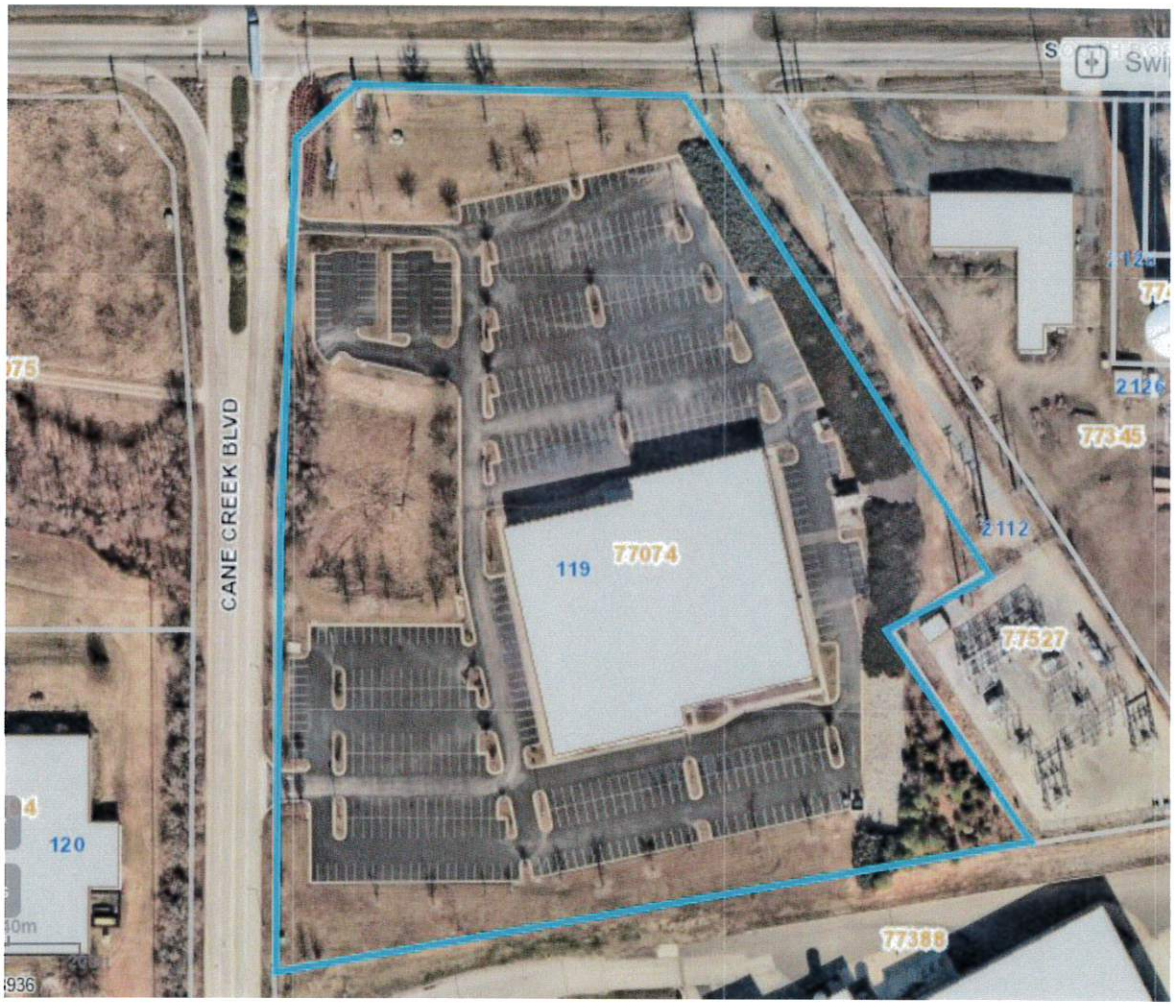

AGREEMENT FOR PURCHASE AND SALE OF REAL ESTATE

THIS AGREEMENT FOR PURCHASE AND SALE OF REAL ESTATE (this "Agreement") is made this 5th day of February, 2025 by and between PRA HOLDING VII, LLC a Virginia limited liability company ("Seller"); KARE PARTNERS, LLC, a North Carolina limited liability company ("Purchaser"); and BERGER & KINDBERG LAW, PA, a North Carlina professional corporation ("Escrow Agent").

W I T N E S S E T H:

That for and in consideration of the sum of Ten Dollars ($10.00) paid by Purchaser to Seller and other good and valuable consideration, the receipt and sufficiency of which are hereby acknowledged, Seller agrees to sell and Purchaser agrees to purchase the property described below (the "Property") in accordance with and subject to the terms and conditions set forth in this Agreement.

1. Property. The Property consists of the following: All that certain tract or parcel of land consisting of approximately 9.76 acres, with all improvements thereon, including an approximately 50,652 square foot office building (the "Building") and rights, ways and appurtenances thereunto belonging, located at 119 Cane Creek Blvd, Danville, Virginia 24540 and designated as tax parcel ID no. 77074, and as shown and described on Exhibit A, attached hereto and made as a part hereof.

2. Purchase Price. The purchase price for the Property shall be Two Million Eight Hundred Thousand Dollars ($2,800,000.00) (the "Purchase Price"). The Purchase Price shall be payable (i) by application of the Deposit (as hereinafter defined) and (ii) by wire transfer of funds to Seller's account at Closing (as hereinafter defined).

3. Deposit. Simultaneously with the execution of this Agreement, Purchaser shall deliver to Escrow Agent a deposit in the amount of Three Hundred Fifty Thousand Dollars ($350,000.00) to insure the performance of Purchaser's obligations hereunder (the "Deposit"). The Deposit, which shall include interest earned thereon shall be paid to Seller to be applied to the Purchase Price at Closing or refunded to Purchaser or paid to Seller pursuant to the terms of this Agreement. If this Agreement is not terminated by Purchaser during the Investigation Period (as hereinafter defined), the Deposit shall become non-refundable for any reason other than a default by Seller or as specifically provided herein.

4. Access and Investigations.

(a) During the term of this Agreement, Purchaser shall have full rights of access to the Property and may itself and through its agents, employees, engineers, architects, surveyors and other representatives (collectively, "Purchaser's Agents") enter onto the Property for the purpose of conducting inspections, tests, soil borings, investigations and surveys, including but not limited to an environmental assessment and a wetlands survey, and for any other purposes necessary for Purchaser to determine the feasibility of its purchase and use of the Property (the "Inspections"); provided, however, Purchaser shall not be permitted to perform any activity on the Property which involves any drilling, digging, cutting or other invasive activity unless (i) recommend by a Phase I Environmental Site Assessment and (ii) approved by Seller.

information regarding the Property obtained by Purchaser (collectively "Due Diligence Items"). Seller acknowledges that if such Due Diligence Items are delivered to Seller, they are delivered without any representations or warranties of any kind, and that Seller shall rely on the same at its risk.

5. As-Is Sale.

(a) Purchaser acknowledges and agrees that:

(i) Purchaser has conducted and shall continue to conduct during the Investigation Period, or waive its right to conduct, such due diligence as Purchaser has deemed or shall deem necessary or appropriate.

(ii) The Property shall be sold, and Purchaser shall accept possession of the Property as of the Closing, "AS IS, WHERE IS, WITH ALL FAULTS", with no right of setoff or reduction in the Purchase Price, except as expressly set forth to the contrary in this Agreement and the closing documents.

(iii) Except for Seller's warranties set forth herein, Seller, its counsel, Seller's property manager, any direct or indirect owner of any beneficial interest in Seller, any officer, director, employee, or agent of Seller, its counsel, Seller's property manager or any direct or indirect owner of any beneficial interest in Seller, and any other entity or individual affiliated or related in any way to any of the foregoing (collectively, the "Seller Parties") shall not be deemed to have made any verbal or written representations, warranties, promises or guarantees (whether express, implied, statutory or otherwise) to Purchaser with respect to the Property, any matter set forth, contained or addressed in the materials delivered or made available to Purchaser's Agents, including, but not limited to, the accuracy and completeness thereof, or the results of Purchaser's due diligence.

(iv) Purchaser shall independently confirm to its satisfaction all information that it considers material to its purchase of the Property or the transaction.

(b) By accepting the Deed (as hereinafter defined) and closing the transaction, Purchaser, on behalf of itself and its successors and assigns, shall thereby release each of the Seller Parties from, and waive any and all liabilities against each of the Seller Parties for, attributable to, or in connection with the Property, whether arising or accruing before, on or after the Closing and whether attributable to events or circumstances which arise or occur before, on or after the Closing, including, without limitation, the following: (a) any and all statements or opinions heretofore or hereafter made, or information furnished, by any Seller Parties to any Purchaser's Agents; and (b) any and all liabilities with respect to the structural, physical, or environmental condition of the Property, whether such liabilities are latent or patent, including, without limitation, all liabilities relating to the release, presence, discovery or removal of any hazardous or regulated substance, chemical, waste or material (collectively, "Hazardous Materials") that may be located in, at, about or under the Property, or connected with or arising out of any and all claims or causes of action based upon CERCLA (Comprehensive Environmental Response, Compensation, and Liability Act of 1980, 42 U.S.C. §§9601 et seq., as amended by SARA (Superfund Amendment and Reauthorization Act of 1986) and as may be

further amended from time to time), the Resource Conservation and Recovery Act of 1976, 42 U.S.C. §§6901 et seq., or any other Federal, State or municipal Laws relating to environmental contamination, or any other related claims or causes of action (collectively, "Environmental Liabilities"); and (c) any implied or statutory warranties or guaranties of fitness, merchantability or any other statutory or implied warranty or guaranty of any kind or nature regarding or relating to any portion of the Property. Notwithstanding the foregoing, the foregoing release and waiver is not intended and shall not be construed as affecting or impairing any rights or remedies that Purchaser may have against Seller with respect to (i) a breach of any of Seller's warranties set forth herein, (ii) any of the obligations of Seller under this Agreement that expressly survive the Closing, or (iii) any acts constituting fraud by Seller.

(c) Notwithstanding any provision in this Section 5 to the contrary, the releases, waivers and assumptions set forth in this Section 5 shall not be construed as an indemnification by Seller or Purchaser for the benefit of the other party.

(d) The provisions of this Section 5 shall be binding upon and shall inure to the benefit of the parties hereto and their respective successors and permitted assigns.

(e) The provisions of this Section 5 shall be deemed reaffirmed by Seller and Purchaser by delivery and acceptance of the Deed and shall survive the Closing.

6. Title. Purchaser shall be entitled to receive good and marketable fee simple title, insurable at Purchaser's expense, by a title company acceptable to Purchaser, free and clear of all liens and encumbrances, but subject to (i) the terms and conditions of this Agreement, (ii) the current year's real estate taxes not yet due and payable, (iii) applicable ordinances affecting the Property and (iv) such matters as can be disclosed by a survey and title examination of the Property (subject to the right of Purchaser to object to such matters as set forth below). For a period of sixty (60) days after the Execution Date (the "Title Examination Period"), Purchaser shall conduct an examination of title to the Property and have a physical survey (the "Survey") made of the Property. Any title exceptions (other that those listed in items (i) - (iii) above to which Purchaser shall have no right to object) identified by Purchaser as a result of the title examination and the Survey which constitute exceptions to the title as described above and which are unacceptable to Purchaser (the "Title Exceptions") and the requirements of Purchaser's title insurance company which Purchaser believes should be satisfied by Seller (the "Requirements") shall, together with a copy of the Survey, be reported to Seller in writing ("Purchaser's Title Notice") prior to the expiration of the Title Examination Period. If no Purchaser's Title Notice is given prior to the expiration of the Title Examination Period, Purchaser shall be deemed to have waived any objection to the title to the Property. Within ten (10) days after receipt of Purchaser's Title Notice, Seller shall advise Purchaser in writing ("Seller's Title Notice") of those Title Exceptions, if any, which Seller shall eliminate as exceptions to title to the Property and those Requirements which Seller shall satisfy. If no Seller's Title Notice is given, Seller shall be deemed to have refused to eliminate any exceptions or satisfy any Requirements. If Seller's Title Notice is given and Purchaser approves of Seller's Title Notice, Seller shall at or prior to the date of Closing eliminate those Title Exceptions and satisfy those Requirements set forth in Seller's Title Notice. If Purchaser disapproves of Seller's Title Notice (which disapproval shall be given within five (5) days after receipt of Seller's Title Notice) or no Seller's Title Notice is given and Purchaser does not waive the requests set forth in

Purchaser's Title Notice, this Agreement shall terminate, the Deposit shall be returned to Purchaser and, except as otherwise provided herein, neither Purchaser nor Seller shall have further rights or obligations hereunder.

7. Closing; Possession.

(a) At Closing, Seller will deliver to Purchaser a Special Warranty Deed conveying title to the Property to Purchaser according to the record description of the Property, the Bill of Sale, if applicable, an affidavit regarding parties in possession and mechanics' and materialmens' liens to the order of and acceptable to Purchaser's title insurance company sufficient to eliminate the standard exceptions for such matters, an affidavit of non-foreign status executed by Seller, and all information required for compliance with the IRS 1099S reporting requirements. Except as otherwise provided for herein, Closing hereunder shall be made at the offices of Escrow Agent on the date specified by Purchaser upon ten (10) days prior written notice to Seller, but no later than thirty (30) days after the expiration of the Investigation Period. Provided that, in the event the Purchaser requires additional time to procure the Special Use Permit, Purchaser shall have the right to extend the Closing date for two (2) thirty (30)-day periods (each, a "Closing Extension"). In the event Purchaser exercises a Closing Extension, Purchaser shall pay into escrow Ten Thousand Dollars ($10,000) for each Closing Extension (each, an "Extension Payment"). Such Extension Payment(s) shall be non-refundable to Purchaser and shall be paid to Seller if Closing does not occur because Purchaser has not obtained the Special Use Permit or if Purchaser defaults under this Agreement. If Closing does occur, the Extension Payment(s) shall be applicable to the Purchase Price. In the event Purchaser defaults in the performance of this Agreement, Seller shall be entitled to retain the Deposit and Extension Payment(s), if applicable, as liquidated damages. In the event of a default by Seller under this Agreement, subject to Clause 14, Purchaser's sole and exclusive remedy shall be to obtain a refund of the Deposit and Extension Payment(s), if applicable.

(b) Provided that Purchaser has used diligent efforts to obtain the Special Use Permit, in the event the Purchaser's application for the Special Use Permit is denied by the City of Danville for any reason whatsoever, and/or the Purchaser has been unable to procure the Special Use Permit before the scheduled Closing date, as may be extended, this Agreement shall be terminated as of the scheduled Closing date, and the Deposit shall be refunded to Purchaser. For the avoidance of doubt, if this Agreement is terminated pursuant to the foregoing sentence, any Extension Payments shall not be refunded to Purchaser and Escrow Agent shall pay the Extension Payments to Seller.

8. Risk of Loss. All risk of loss as a result of any exercise of the power of eminent domain or by reason of fire or other casualty shall remain on Seller until Closing and delivery of all instruments required under this Agreement.

9. Costs. Except as otherwise provided in this Agreement, Purchaser and Seller shall each pay all of its own costs in connection with the purchase and sale of the Property. Seller shall pay for the preparation of the deed, the affidavits and certifications, the grantor's tax, and its attorneys' fees. Purchaser shall pay for the cost of the title examination, the title insurance premium, the Survey, the cost of the Inspections, all recording taxes and fees (other than the

grantor's tax) and its attorneys' fees. All taxes and assessments and any other sums normally and usually pro-rated shall be prorated as of the date of Closing, except as specified herein.

10. Brokerage. Seller and Purchaser each represents and warrants to the other that this transaction has resulted between the parties without the assistance of any broker or finder being involved other than Colliers International of Virginia, who represents Seller ("Broker"). Purchaser represents and warrants to Seller that Purchaser is representing itself with this transaction. In the event the Closing occurs hereunder and the Purchase Price is paid to Seller, Seller agrees to pay Broker a commission equal to three percent (3%) of the Purchase Price pursuant to separate agreements between Seller and Broker, and at Closing, give the Purchaser credit for an amount equivalent to three percent (3%) of the Purchase Price to be adjusted against the Purchase Price (for a combined six percent (6%) of the Purchase Price) . In the event there are fees or commissions payable to any other person or firm on account of this sale and purchase, such fees or commissions shall be the full responsibility of the party whose actions resulted in such a claim for fees or commissions, and such party shall indemnify and hold the other harmless as to any payment with respect thereto. The provisions of this paragraph shall survive the Closing and transfer of legal title to the Property.

11. Representations and Warranties of Seller. In addition to any express agreements of Seller contained herein, Seller represents and warrants to Purchaser as follows:

(a) Seller has the legal right, power and authority to enter into this Agreement and the instruments referenced herein and to consummate the transactions contemplated hereby.

(b) All requisite action (corporate, trust, partnership, or otherwise) has been taken by Seller in connection with the execution and delivery of this Agreement, the instruments referenced herein and the consummation of the transactions contemplated hereby. No consent of any partner, shareholder, creditor, investor, judicial or administrative body, authority or other party is required.

Purchaser acknowledges and agrees that, except as otherwise specifically provided in this Agreement, Seller makes no representations or warranties of any nature regarding the Property.

12. Representations and Warranties of Purchaser. In addition to any express agreements of Purchaser contained herein, Purchaser represents and warrants to Seller as follows:

(a) Purchaser has the legal right, power and authority to enter into this Agreement and the instruments referenced herein and to consummate the transactions contemplated hereby.

(b) All requisite action (corporate, trust, partnership, or otherwise) has been taken by Purchaser in connection with the execution and delivery of this Agreement, the instruments referenced herein and the consummation of the transactions contemplated hereby. No consent of any partner, shareholder, creditor, investor, judicial or administrative body, authority or other party is required.

(c) Purchaser is solvent and has sufficient resources to perform its obligations under this Agreement.

13. Seller's Reports. Purchaser acknowledges that Seller makes no representation regarding the accuracy of reports that Seller delivers to Purchaser with respect to the Property, if any, and that any reliance by Purchaser shall be at its own risk. Purchaser shall have the right to confirm the accuracy of such reports during the Investigation Period as Purchaser may elect.

14. Waivers. No delay or omission by any party hereto to exercise any right or power accruing upon any noncompliance or default by any party with respect to any of the terms of this Agreement shall impair any such right or power or be construed to be a waiver thereof, except as otherwise may be herein provided. A waiver by either party of any covenant, condition or agreement to be performed by the other party must be in writing and shall not be construed to be a waiver of any succeeding breach thereof or any covenant, condition or agreement herein contained.

15. Notices. Any notices, requests, or other communications required or permitted to be given hereunder shall be in writing and shall be either (i) delivered by hand, (ii) mailed by United States certified or registered mail, return receipt requested, postage prepaid, (iii) sent by overnight delivery service (e.g., Federal Express, , etc.) or (iv) sent by email (with the original being sent by one of the other permitted means or by regular United States mail) and addressed to each party at the applicable address set forth herein. Any such notice, request, or other communication shall be considered given or delivered, as the case may be, on the date of hand delivery (if delivered by hand), on the third (3rd) day following deposit in the United States mail (if sent by United States registered mail), on the next business day following deposit with an overnight delivery service with instructions to deliver on the next day or on the next business day (if sent by overnight delivery service), or on the day sent by facsimile (if sent by facsimile, provided the original is sent by one of the other permitted means as provided herein in this paragraph or by regular United States mail). However, the time period within which a response to any notice or request must be given, if any, shall commence to run from the date of actual receipt of such notice, request, or other communication by the addressee thereof. Rejection or other refusal to accept or inability to deliver because of a changed address of which no notice was given shall be deemed to be receipt of the notice, request, or other communication. By giving at least ten (10) days prior written notice thereof, any party hereto may, from time to time and at any time, change its mailing address hereunder.

If to Purchaser:

Kare Partners, LLC
2675 Court Drive
Gastonia, NC 28054
Attention: Adi Khindaria
Email: adi@karepartners.com

With copy to:

Berger & Kindberg Law, PA,
5925 Carnegie Blvd, Ste 200,
Charlotte, NC 28209
Attention: Hal Berger
Email: hal@lawcarolinas.com

If to Seller:

PRA Holding VII, LLC
150 Corporate Blvd.
Norfolk, VA 23502
Attention: Office of General Counsel
Email: GCCorportate@pragroup.com

With copy to:

William Homiller
Troutman Pepper Locke, LLP
1001 Haxall Point
Richmond, VA 23219
Email: Will.Homiller@troutman.com

If to Escrow Agent:

Berger & Kindberg Law, PA,
5925 Carnegie Blvd, Ste 200,
Charlotte, NC 28209
Attention: Hal Berger
Email: hal@lawcarolinas.com

16. Survival of Provisions. No covenants, representations, warranties and agreements set forth in this Agreement shall survive the Closing except those warranties contained in the deed or other closing documents and except as specifically provided for in this Agreement.

17. Miscellaneous. The section headings and captions contained herein are for reference purposes only and shall not in any way affect the meaning and interpretation of the terms of this Agreement. All questions with respect to the construction of this Agreement and the rights and liabilities of the parties hereto shall be determined in accordance with the applicable provisions of the laws of the Commonwealth of Virginia. This Agreement may be executed in any number of duplicate originals or counterparts, all of which shall constitute a single agreement. Any duplicate original on which the signatures of both parties shall appear shall be deemed an original of this Agreement. Any number of counterparts on which the signatures of both parties shall appear shall constitute a duplicate original. This Agreement constitutes the entire agreement of the parties regarding the Property, and there are no

of the willful misconduct of Escrow Agent. Accordingly, Escrow Agent shall not incur any liability with respect to any action taken or omitted to be taken in good faith upon reliance upon any document, including any written notice of instruction provided for in this Agreement, not only as to its due execution and validity and effectiveness of its provisions, but also to the truth and accuracy of any information contained therein, which Escrow Agent shall in good faith believe to be genuine, to have been signed or presented by a proper person or persons and to conform with the provisions of this Agreement.

(c) Purchaser and Seller hereby agree to indemnify, defend, and hold harmless Escrow Agent against any and all losses, claims, damages, liabilities and expenses, including, without limitation, reasonable attorneys' fees and disbursements, which may be imposed upon or incurred by Escrow Agent in connection with its serving as Escrow Agent hereunder, unless such losses, claims, damages, liabilities and expenses are the result of Escrow Agent's willful misconduct in performing its obligations hereunder.

(d) In the event of a dispute between any of the parties hereto, sufficient in the discretion of Escrow Agent to justify its doing so, Escrow Agent shall be entitled to tender unto the registry or custody of any court of competent jurisdiction all money held by it under the terms of this Agreement, together with such legal pleadings as it deems appropriate and thereupon be discharged from further responsibility under this Agreement.

[SIGNATURES ON FOLLOWING PAGE]

IN WITNESS WHEREOF the parties have executed this Agreement for Purchase and Sale of Real Estate pursuant to due authority.

Purchaser:

KARE PARTNERS, LLC

Date: 02/05/2025

By: _____
Name: Adi Khindaria
Title: CEO

Seller:

PRA HOLDING VII, LLC

Date: Feb 6, 2025

By: Rakesh Sehgal
Name: Rakesh Sehgal
Title: President and Treasurer

Escrow Agent:

BERGER & KINDBERG LAW, PA,

Date: 2/06/2025

By: _____
Name: Hal Berger
Title: President

307279658v4

EXHIBIT A

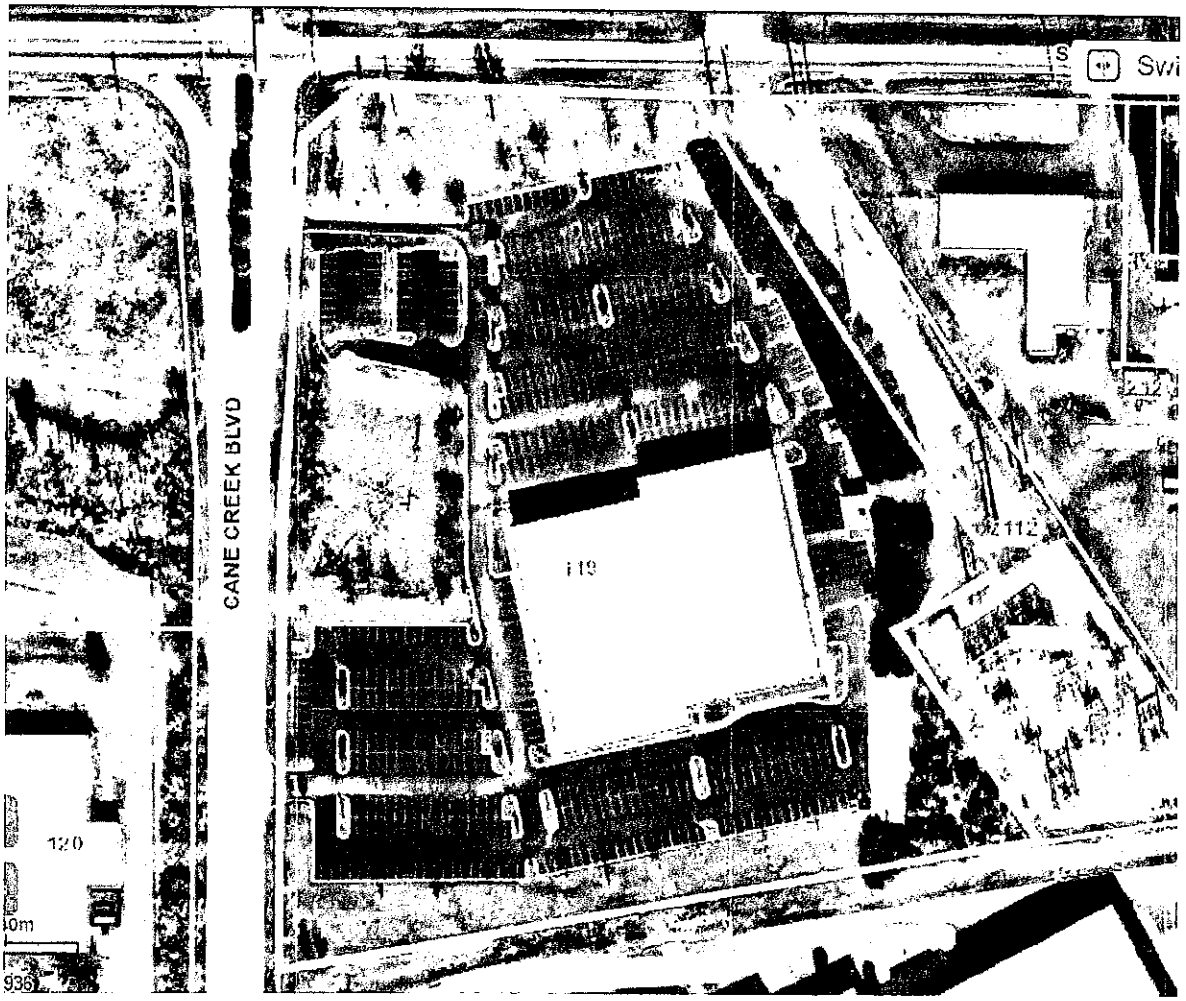

307279658v4

Signature:

Email: hal@lawcarolinas.com

Signature:

Email: rakesh.sehgal@pragroup.com

PG 0045 MAR -5 '92

PROTECTIVE COVENANTS

FOR THE

DANVILLE AIRSIDE INDUSTRIAL PARK (AS AMENDED)

CITY OF DANVILLE VIRGINIA
SEPTEMBER 2011

ARTICLE 1: RECITALS

1.1 THE PROPERTY

The City is the present record title holder of certain real property situated in the City of Danville, Virginia, described in deeds recorded on Deed Book 772, at page 625, and as shown on Exhibit A hereto and incorporated by reference herein, which land is referred to herein as "the Property".

1.2 INTENT

The City desires to subject the Property to the conditions, covenants, restrictions, and reservations hereinafter set forth to ensure proper use and appropriate development and improvements of said Property. It is anticipated that the City will subsequently covey the Property, other than the Property Used in Common, shown on Exhibit B, to the Industrial Development Authority of Danville, Virginia for development as an industrial park.

ARTICLE 2: DEFINITIONS

2.1 DEFINTIONS OF TERM

1. **"Authority"** shall mean the Industrial Development Authority of Danville, Virginia, its successors and assigns.
2. **"City"** shall mean the City of Danville, Virginia.
3. **"City Council"** shall mean the City Council of the City of Danville, Virginia.
4. **"Department of Community Development"** shall mean the department of the City of Danville, Virginia, which shall assist the Review Committee in monitoring compliance with these protective covenants for the Danville Airside Industrial Park.
5. **"Executive Committee"** shall mean a committee, Consisting of the Chairman, Vice-Chairman, and Secretary of the Industrial Development Authority of Danville, Virginia, which shall constitute the Executive Committee of the Review Committee.
6. **"Improvements"** shall mean and include but not be limited to buildings, parking areas, loading areas,

fences, walls, hedges, landscaping, mass plantings, poles, signs, and any structures of any type or kind.

7. **"Owner"** shall mean the party or parties other than the Authority owning fee title to a Parcel, provided, however, that an Owner may, upon written notice to the Review Committee, assign all or part of his rights but not his duties hereunto to Owner's Tenant.

8. **"Parcel"** shall mean any contiguous plot of land, the Size and dimensions of which shall be established by the legal descriptions in the original conveyance from the City to the Authority or in any subsequent conveyance by the Authority or any successor in interest of all or part of said plot of land. A Parcel may also be established by the Authority by an instrument in writing, executed, acknowledged and recorded by the Authority, which designated a plot of land as a Parcel for purposes of these covenants. If two or more Parcels, defined above, are acquired by the same owner in fee, such commonly owned Parcels may, at the option of said owner, be combined and treated as a single Parcel for purposes of the

Covenants contained herein.

9. **"Property Used in Common"** shall mean and refer to those Areas of Property devoted to the common use and enjoyment of the owners of all the Parcels, their tenants and employees, and the public at large, including but not limited to parks, entrance areas, recreational facilities, major drainage ways, lakes, detention ponds, utility lines, pumping stations, and any other related or similar improvements relating to the enhancement of the overall quality of the Property.

10. **"Review Committee"** shall mean a Committee, consisting of seven members, appointed by the City Council of the City of Danville, Virginia, and comprised initially of the seven members if the Board of Directors of the Authority whose terms shall be concurrent with their terms as directors. In the event that it is finally judicially determined that the City Council is not authorized to appoint members of the Review Committee, then the members of the Committee shall be appointed for indefinite terms by the owners of fee title,

including the Authority and the owner of the Property Used in Common, voting according to their Proportionate land area.

3.1 PURPOSE

The Property is hereby made subject to the following conditions, covenants, restrictions, and reservations, all of which shall be deemed to run with the Property and each and every part thereof, insofar as federal, state, and local laws permit, to ensure proper use of appropriate development and improvement of said premises so as to:

1. Protect the Owners and tenants of Parcels against such improper development and use of surrounding Parcels as will depreciate the value and use of their Parcels.
2. Prevent the erection on the Property of structures constructed of improper or unsuitable materials or with improper quality and methods of construction.
3. Ensure adequate and reasonably consistent development of the Property.
4. Encourage and ensure the erection of attractively designed permanent improvements appropriately located within the Property in order to achieve harmonious appearance and function.
5. Insure the construction of adequate off-street parking and loading facilities.
6. Generally promote the welfare and safety of occupants, tenants and owners of Parcels.

PG 0 0 8 1 MAR-5 92

ARTICLE 4: PERMITTED AND PROHIBITED USES

4.1 PERMITTED USES

The following uses are permitted to be established on Parcels:

1. Industrial, manufacturing, processing.
2. Light industrial, wholesaling, warehousing, distribution.
3. Offices.
4. Research, engineering.
5. Retail uses, only if such uses are clearly incidental to the uses listed above.
6. Such other uses as the Review Committee shall find to be directly related and compatible with the overall character and intent of the development of the Property.

4.2 PROHIBITED USES

1. Residential uses of any kind.
2. Retail establishments other than those which are incidental to other permitted uses.
3. Noxious or offensive activities which may be or become an annoyance or nuisance to the Owner, tenant, or occupant of other Parcels within the Property by reasons of unsightliness or the excessive emission of fumes, odors, glare

PG0052 MAR-5-92

vibration, gases, radiation, dust, liquid, or solid waste, smoke, or noise.

4. Any use which the Review Committee shall find to be specifically incompatible with the overall character and intent of the development of the Property.

2025 AERIAL IMAGERY OF SUBJECT PROPERTY

Prepared by:
Planning Division
2/20/2025

N

DANVILLE VIRGINIA

Disclaimer: Information contained on this map is to be used for reference purposes only. The City of Danville is not responsible for any inaccuracies herein contained. The City of Danville makes no representation of warranty as to this map's accuracy, and in particular, its accuracy in labeling, dimensions, contours, property boundaries, or placement or location of any map features thereon. No responsibility is assumed for damages or other liabilities due to the accuracy, availability, use or misuse of the information herein provided.

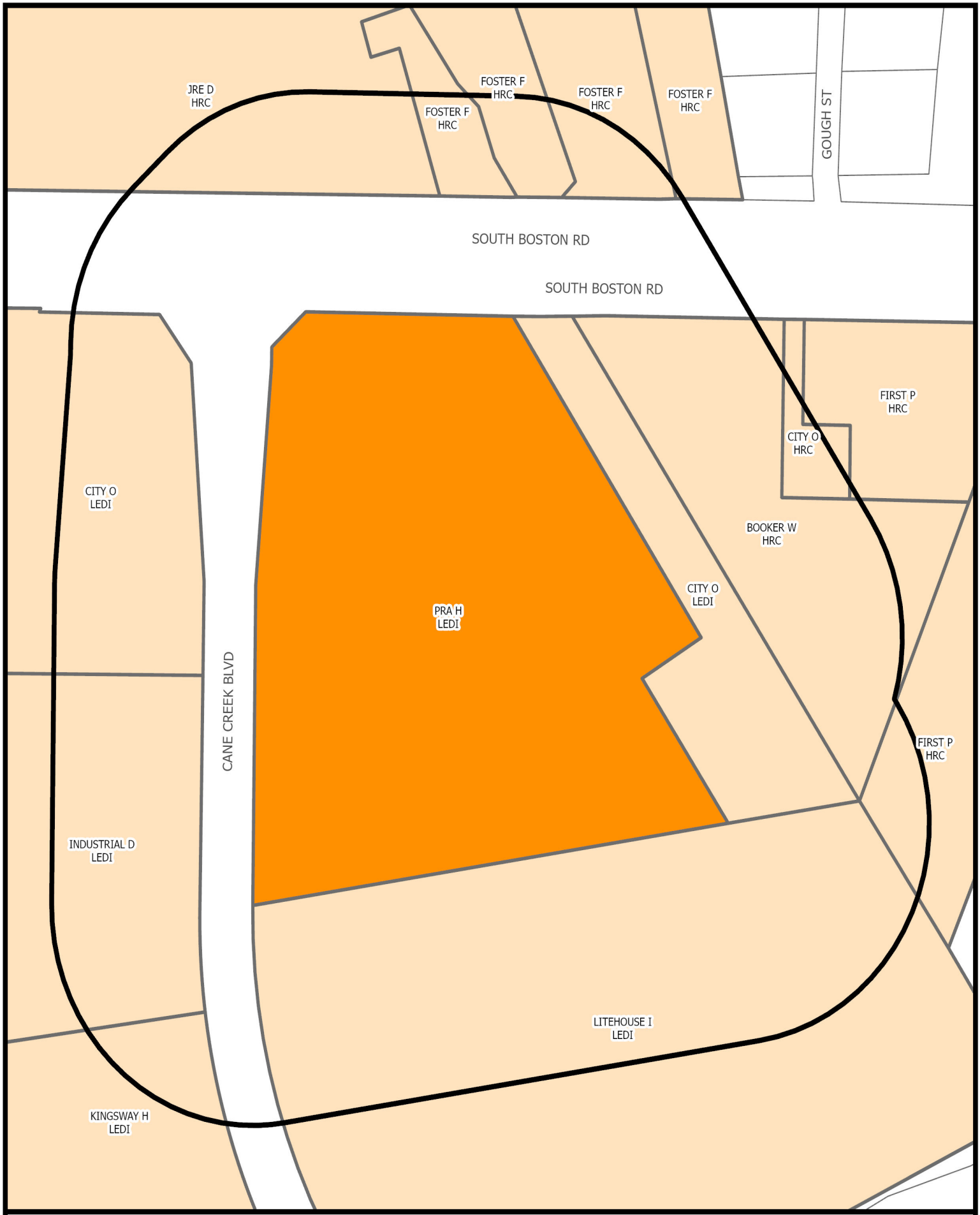

SURROUNDING PROPERTY OWNERS AND ZONING WITHIN 300 FEET OF SUBJECT PROPERTY

Prepared by:
Planning Division
2/20/2025

N

DANVILLE VIRGINIA

Disclaimer: Information contained on this map is to be used for reference purposes only. The City of Danville is not responsible for any inaccuracies herein contained. The City of Danville makes no representation of warranty as to this map's accuracy, and in particular, its accuracy in labeling, dimensions, contours, property boundaries, or placement or location of any map features thereon. No responsibility is assumed for damages or other liabilities due to the accuracy, availability, use or misuse of the information herein provided.

CITY OF DANVILLE
Community Development
Division of Planning and Zoning

MEMORANDUM

DATE: MARCH 10, 2025
TO: CITY COUNCIL
FROM: CITY PLANNING COMMISSION
RE: SPECIAL USE PERMIT APPLICATION PZ25-00160

Special Use Permit application PZ25-00160 filed by Kare Partners, LLC to allow uses permitted by right and by special use permit in the HR-C District (Child Therapeutic Day Support Services) in accordance with Article 3.O Section C Item 15 at Parcel 77074 (119 Cane Creek Boulevard).

RECOMMENDATION

The Planning Commission, at their March 10, 2025, meeting voted 6-0 to recommend approval of Special Use Permit application PZ25-00160.

Steve Petrick RB

Mr. Steve Petrick, Chair

Council Letter
City of Danville, Virginia

CL - 2015 **NEW BUSINESS B.**

City Council REGULAR MEETING

Meeting Date: May 6, 2025

Subject: Consideration of Special Use Permit Application at 1218 West Main Street.

From: Renee Burton, Division Director of Planning

COUNCIL ACTION

1. Public Hearing

2. An Ordinance Granting Special Use Permit Application PZ25- 00164 filed by Christine Fuston to Allow a Child Day Care Center at Parcel 51471 (1218 West Main Street) in Accordance with Article 3.M., Section C., Item 6.

SUMMARY

Christine Fuston has requested a Special Use Permit that would allow the operation of a 24-hour day care center at 1218 West Main Street, zoned HR-C Highway Retail Commercial. 1218 West Main Street is a commercial-use building on approximately 18,000 square feet near the corner of West Main Street and Bishop Road. The property is currently vacant and has previously been utilized in various ways, including as a childcare facility.

The applicant is requesting a Special Use Permit to allow the commercial property to be used to establish Kidzplay, a 24-hour childcare facility operating from Sunday through Monday. Kidzplay will provide care for approximately 150 children ranging in age from infants to 12 years and employ approximately 20 caregivers, managers, and support staff for full-time, part-time, and drop-in childcare. The facility will have designated play areas, nap areas, and activity areas to accommodate children of varying ages. Kidzplay will fill a need in the Danville community for parents and caregivers who work non-traditional schedules.

Day care centers are not permitted by right in the HR-C Highway Retail Commercial zoning classification. However, Article 3.M, Section C, Item 6 of the Uses Permitted by Special Use Permit allows for “day care centers (adult and child).” Allowing a Special Use Permit at 1218 West Main Street is in line with the mixed-use corridor designation set forth by the comprehensive plan while not changing the existing zoning classification of the property.

Approval of this Special Use Permit request will require the property to meet current parking requirements at a minimum of one (1) space per employee plus one (1) space per four (4) children or clients in accordance with Article 8, Section G. Currently, the parcel appears to have eight (8) parking spaces located at the front of the principal structure. Approval of this request will also require 50% of parking to be located behind the principal structure pursuant to Article 3.X, Section B.

Twelve (12) notices were sent to surrounding property owners within three hundred (300) feet of the

subject property. Four (4) notices were received; all were not opposed.

On April 7, 2025, the City Planning Commission voted 6-0 to recommend approval of Special Use Permit PZ25-00164 to allow a child day care center in accordance with Article 3.M Section C Item 6 at Parcel 51471 (1218 West Main Street).

RECOMMENDATION

It is recommended that City Council adopt an Ordinance to grant a Special Use Permit to allow the operation of a child day care center at Parcel 51471 (1218 West Main Street) in accordance with Article 3.M Section C Item 6.

Attachments

1. Ordinance
2. Application
3. 1218 W Main Street - Aerials Map
4. 1218 W Main Street - Owners Zoning Map
5. Planning Commission Recommendation

PRESENTED:_____

ADOPTED: _____

ORDINANCE NO. 2025____.____

AN ORDINANCE GRANTING SPECIAL USE PERMIT APPLICATION PZ25-00164 FILED BY CHRISTINE FUSTON TO ALLOW A CHILD DAY CARE CENTER AT PARCEL 51471 (1218 WEST MAIN STREET) IN ACCORDANCE WITH ARTICLE 3.M., SECTION C., ITEM 6.

NOW, THEREFORE, BE IT ORDAINED by the Council of the City of Danville, Virginia, that the report of the Planning Commission recommending approval of Special Use Permit Application PZ25-00164, filed by Christine Fuston requesting a Special Use Permit to allow a child day care center at Parcel ID 51471 (1218 West Main Street) in accordance with Article 3.M., Section C., Item 6, be and the same is hereby received; and

BE IT FURTHER ORDAINED that in consideration of said report and the public hearing this day held by Council, Special Use Permit Application PZ25-00164, filed by Christine Fuston requesting a Special Use Permit to allow a child day care center at Parcel ID 51471 (1218 West Main Street) in accordance with Article 3.M., Section C., Item 6 is hereby granted and approved.

Approved:

_____
Mayor

Attest:

_____
City Clerk

Approved as to
Form and Legal Sufficiency:

_____
City Attorney

CITY OF DANVILLE
Community Development
Division of Planning and Zoning

SPECIAL USE PERMIT APPLICATION

Article 6. Section D. Application Requirements for Special Use Permit.

1. *An application for a special use permit shall be made by the owner, contract purchaser with the owner's written consent, or the owner's agent, of the property on which the proposed use is to be located. The application shall be submitted to the Director of Planning/Zoning Administrator and shall be accompanied by the filing fee of $400.00.*

2. *If the request for a special use permit has been denied by the City Council, a request in substantially the same form shall not be resubmitted within one (1) year of the date of denial.*

PLANNING DIVISION PROVIDED INFORMATION

Application #:	P225-00164	PC Meeting Date:	~~March 10,~~ April, 1st 2025
Date Received:	2-12-2025	Received By:	Arsenio
Parcel ID:	51471	Address:	1218 W Main
Existing Zoning:	Hr-c	Future Land Use:	Hr-c

APPLICANT PROVIDED INFORMATION

Property Location:	1218 W. main St, Danville VA 24541
Applicant:	Christine Fuston
Applicant's Address:	155 Southfork dr. Reidsville NC 27320
Applicant's Phone Number:	3363832118
Applicant's Email:	Christineafuston1@gmail.com

Describe Proposed Request: We plan to establish a 24-hr childcare facility in Danville, Serving children aged 6 weeks to 13 years old. The facility will provide flexible care options to support parents with varying schedules while also benefitting the broader community. In addition to regular care, we will offer safe and and reliable drop in option for families of visting Danville patrons ensuring convenient childcare for short term needs.

Applicant's Signature 2/24/2025 Date

Property Owner's Signature (if not applicant) 2/24/25 Date

PLEASE ATTACH THE FOLLOWING

1. A preliminary site plan in accordance with the Site Plan Regulations.
2. 2. A description of the proposed use and, where applicable, the hours of operation and the proposed number of employees/patrons.
3. 3. A written statement of proposed project compatibility with the following:
   a. The Comprehensive Plan.
   b. The applicable zoning district.
   c. The surrounding properties.
   d. Current and future neighborhood conditions.
   e. Pedestrian and vehicular traffic patterns, on-site and off-site.
   f. Adequate public facilities.
4. When requested by the Director of Planning/Zoning Administrator, the Planning Commission, or the City Council, the following information shall be provided by the applicant:
   a. The architectural elevations and floor plans of proposed building(s).
   b. Traffic impact analysis.
   c. Fiscal impact analysis.
   d. Parking and site circulation analysis.
   e. Photographs of property and surrounding area.
   f. Environmental impact statement.

2a. We propose to open a 24-hour daycare facility in Danville, operating Monday through Sunday, that offers both weekly and drop-in childcare services. The daycare will accommodate approximately 150 children, supported by a dedicated team of around 20 employees. This facility will address the needs of working parents who require flexible care options outside of traditional daycare hours, as well as provide a safe, reliable place for visitors to Danville who need childcare while exploring the city. Our mission is to support the community by providing high-quality childcare services that accommodate a wide range of schedules, ensuring that parents and caregivers can balance work, personal time, and family commitments. Additionally, our facility will offer a convenient solution for families visiting Danville, giving them peace of mind while they enjoy local attractions or attend to business. The daycare will be staffed with trained professionals and equipped with modern facilities, creating a nurturing and secure environment for children of all ages. By meeting the demand for flexible childcare options, our service will contribute to the well-being of local families and enhance the accessibility of the city for both residents and visitors.

3.

3a. The Comprehensive plan

- **Overview of the Business:**
  - A 24-hour daycare service offering weekly and drop-in care for approximately 150 children, operating Monday through Sunday.
  - Designed to meet the needs of working parents with traditional as well as non-traditional hours and provide a safe, reliable option for visitors to Danville.
- **Mission Statement:**
  - Our mission at Kidzplay is that every child deserves a nurturing and inspiring environment that sparks their natural curiosity and creativity. We want to provide a high quality flexible and safe childcare experience that not only meets the needs of our families in the community but also exceeds expectations.
- **Location:**
  - 1218 West Main Street, Danville Virginia 24541 which used to be the location of the apple tree childcare center a few years ago.

2. Business Description

- **Business Model:**
  - Childcare services will be offered on a weekly basis (full-time or part-time) as well as drop-in care for parents who need short-term care.
  - Targeting local working parents, as well as visitors to Danville who require temporary care while enjoying the city.
- **Target Market:**
  - **Local Parents**: Those who work during normal hours of 9-5 as well as outside of typical business hours (night shifts, early mornings, weekends, etc.).
  - **Visitors to Danville**: Tourists or business travelers who need short-term childcare.
- **Business Hours:**
  - 24/7 operation (Monday-Sunday, open 24 hours per day).

3. Market Research

- **Industry Overview:**

  - Danville today has changed in so many ways over the years. With so many more businesses opening in Danville as well as the local ones that have been around for some time, many parents must work non-traditional hours due to various industries and professions that require evening, overnight, or early-morning shifts. This includes healthcare workers, law enforcement, hospitality, retail, and transportation industries, among others. According to recent studies, nearly 20% of working parents in the U.S. are employed in jobs that require them to work outside of traditional 9-5 hours. This growing trend demands a reliable and flexible childcare solution to support these families.
    - Currently, many daycare centers in Danville operate only during standard business hours, leaving a significant gap in services for those who work overnight or during weekends. Our 24-hour daycare facility will address this void, offering much-needed support for parents who struggle to find safe and reliable care for their children during unconventional hours. Danville is home to a large number of employees working at the local casino, which operates around the clock, including late nights, weekends, and holidays. Many of these

workers—such as dealers, servers, security staff, and managers—are required to work irregular hours, including overnight and early morning shifts. For these families, traditional daytime childcare services are simply not an option, creating a significant gap in childcare availability. This also includes some of the larger contributors and local businesses such as Goodyear Tire and Rubber Company, Nestlé USA, Essel Propack, CIT, EBI and many others!

- Danville, as a growing community, houses many families that depend on non-traditional working hours to support local businesses and essential services. By providing a 24-hour childcare service, we not only support the individual needs of these families but also contribute to the economic vitality of the city. Parents who have flexible, reliable childcare options are more likely to remain employed, which benefits the local economy by maintaining a stable workforce.

Additionally, our facility can help attract new residents to Danville, especially those working in fields requiring irregular schedules. For example, healthcare professionals, who often need overnight childcare, will have greater confidence in relocating to the area if flexible childcare options are available.

Another significant need for 24-hour childcare arises from the influx of visitors to Danville. With the city's growing tourism and business-related activities, many visitors require a trustworthy and safe environment for their children while they attend meetings, explore local attractions, or engage in leisure activities.

- Offering drop-in childcare 24 hours a day ensures that visiting parents can make the most of their time in the city, knowing that their children are being cared for in a secure and enriching environment. This service will contribute to a positive experience for tourists and business travelers, potentially making Danville a more attractive destination for both leisure and work-related travel.

Competitive Analysis:

While Danville boasts many wonderful childcare programs—ranging from facilities to childcare homes—all providing quality care, there remains a significant gap in the market for families who need services beyond traditional business hours. Most local providers like Children's House, Helping Hands, and harvest corner Child Kare center close by 6:00 PM, leaving a void for parents working late shifts or those involved in the city's growing nightlife

scene. Additionally, the few childcare options available in surrounding areas also close early, and with high demand for care, many have long wait lists for enrollment, and only offer care up to 4 years old makes access even more limited.

The average cost for childcare for children between the ages of 6 weeks to 4 years ranges from $195 to $300 per week, making it a significant investment for families. Despite this, many providers are unable to meet the needs of parents who require care during Early mornings, late evenings or weekends.

This creates a critical opportunity for a childcare program that can offer flexible hours, including late-night and weekend care, at competitive rates. By providing extended hours, we can fill a crucial need in the community, supporting working families while ensuring their children receive quality, affordable care in a safe, nurturing environment.

- **Market Needs:**
  - Danville is experiencing significant economic growth, driven in part by the recent opening of The **Caesars Casino** and a surge in new businesses entering the area. The casino, along with an influx of restaurants, retail stores, and service-oriented businesses, is creating new job opportunities and bolstering the local economy. As the demand for employees increases, there is a growing need for more flexible childcare options to support working parents—especially those with non-traditional hours. This makes programs like **KidzPlay** an essential solution, offering extended hours and dependable care for families who need it most. Additionally, the rise in home-based childcare providers—many of whom are not licensed—raises concerns about the safety and quality of care. Licensed facilities like KidzPlay provide a safer, regulated environment for children, ensuring peace of mind for parents while contributing to the overall well-being of the community. As Danville's economy continues to grow, the demand for reliable, flexible childcare is becoming increasingly urgent, and KidzPlay is well-positioned to meet this need, further supporting the local workforce and contributing to the economic growth of the area.
  -

4. Services Offered

- **Weekly Childcare:**
  - Full-time and part-time care options for children aged 6 months to 12 years.

- **Drop-In Childcare:**
  - Flexible, short-term care for parents who need childcare for a few hours.
- **Additional Services:**
  - Meal services (healthy snacks and meals).
  - Special programs or educational activities (e.g., early learning programs, arts and crafts).
  - Age-appropriate play areas and equipment.
  - Transportation services (if needed for drop-off/pick-up in the local area).

5. Operational Plan

- **Staffing:**
  - Approximately 20 employees, including daycare providers, management, and support staff.
  - Staff qualifications: All employees will have background checks, CPR/First Aid certifications, and relevant childcare experience which will be up to the standards of the department of education licensing requirements for staff
  - Shift scheduling: Given 24-hour operations, staff will work in shifts to ensure adequate coverage at all times.
- **Facility Setup:**
  - The daycare will be designed with secure, child-friendly environments including separate play areas for different age groups, nap areas, and dedicated spaces for learning and activities.
  - Safety measures: Security cameras, secure entry systems, and safety procedures for all staff.
- **Technology and Software:**
  - Childcare management software for scheduling, billing, and communication with parents.
  - Online booking system for drop-in care reservations.

6. Marketing Strategy

- **Branding and Positioning:**
  - At **KidzPlay**, we understand that modern families in Danville need more than just quality childcare—they need flexibility, safety, and peace of mind. As the community thrives, driven by the success of Caesars and the influx of new businesses, working parents face increased demands on their time. With many local childcare options closing early, KidzPlay is here to fill the critical

gap, offering extended hours, including late-night and weekend care, to meet the needs of today's busy families.

What sets us apart is not only our commitment to providing exceptional care but also our focus on safety. Unlike home-based providers who may not be licensed or regulated, KidzPlay ensures a safe, professional, and nurturing environment for children, giving parents the confidence they deserve. Our licensed facility provides high-quality care that supports the growth and development of every child, all while allowing parents to pursue their careers and contribute to Danville's growing economy.

At KidzPlay, we're more than just a childcare provider; we're a partner in building a thriving, resilient community where families can succeed, knowing their children are cared for in a safe, supportive, and fun environment.

- **Promotional Plan:**
  - **Online Marketing**: A strong online presence through a website, social media (Instagram, Facebook), and local parenting forums/blogs
  - **Local Partnerships**: Collaborate with businesses, hotels, and tourist attractions in Danville to offer discounts or packages for tourists needing childcare.
  - **Referral Program**: Offer discounts or incentives for parents who refer new families.
  - **Grand Opening**: Plan a community event to introduce the daycare to local residents, with tours, games for kids, and special promotions.

7. Financial Plan

- **Startup Costs:**
  - **Facility Setup**: 12,000
  - **Licensing and Permits**: 1,000
  - **Initial Staffing**: 2,720
- **Revenue Projections:**
  - **Pricing Strategy**: 235 for weekly, 15 an hour for drop in, part time 60 per day. We will also be giving discounts to certain employees as well as casino at 200 for weekly and 13.50 for drop ins.
  - **Projected Revenue**: 520,000
- **Operating Expenses:**
  - Salaries, utilities, supplies, insurance, maintenance, marketing, etc. Would be 371,577.20

- Profit and Loss Projections:

Revenue (Monthly Estimate)

- Tuition Fees:
  - 50 children x $235 per week x 4 weeks = $47,000
- Registration Fees (One-time fee of $50 per child, spread over a year):
  - 50 children x $50 = $2,500 annually
  - Monthly portion ($2,500 ÷ 12 months) = $208
- Additional Services (Late pickup, meals, tutoring, etc.) = $2,500
- Grants/Subsidies (if applicable) = $0
- Other Income = $0
- Total Monthly Revenue: $49,708
-

- ## Expenses (Monthly Estimate)

- *Fixed Costs:*

- Rent/Mortgage – $3,000
- Insurance (Liability, Property, Workers' Comp) – $900
- Licensing Fees (Estimated monthly portion) – $300
- Loan Payments (if any) – $0

- *Variable Costs:*

- Staff Wages (Teachers, Assistants, Admin, etc.) – $20,800
- Payroll Taxes & Benefits – $3,500
- Food & Supplies – $2,500
- Utilities (Electricity, Water, Internet, Phone, etc.) – $1,200
- Marketing/Advertising – $500
- Transportation Costs (Field Trips, Gas, Maintenance, etc.) – $1,200
- Maintenance/Repairs – $250
- Miscellaneous Expenses – $500
- Total Monthly Expenses: $35,950

- ### Projected Profit Calculation

- **Projected Monthly Profit: $13,758**

- ## Break-Even Analysis

- ### Given:

- **Total Fixed Costs (Rent, Insurance, Licensing, etc.) = $4,200**
- **Tuition per Child (Per Month) = $940** ($235 per week x 4 weeks)
- **Variable Costs per Child (Food, Supplies, Staff per child, etc.) = $400**
- 👉 **Break-Even Enrollment: 8 children**
- This means that with **8 children enrolled**, your daycare will **cover all expenses**. Anything above that becomes profit.

- ### Final Summary

- 🧮 **Revenue:** $49,708/month
- 📈 **Expenses:** $35,950/month
- 📊 **Projected Profit: $13,758/month**
- 🔄 **Break-Even Enrollment: 8 children**

8. Legal and Regulatory Considerations

- **Licensing and Regulations:** To own and operate a daycare center in Danville, Virginia, you must meet several requirements. First, you must pass a background check and ensure that the building intended for the daycare meets all necessary inspections, including fire safety, environmental regulations, and water testing. These inspections must be completed before your license can be approved. Additionally, as the owner, you are required to complete state-mandated health and safety training, including Phase 1 and Phase 2 courses, before submitting your application. A qualified director must also be in place before the license can be granted. It is essential to be familiar with both the general regulations and specific

daycare standards in Danville to ensure compliance and a safe environment for children.

Qualifications for staff:

Director Age Requirement:

- Must be at least 21 years old (with an exception for 19-21 years old in short-term programs with supervision).

Education & Experience Options:
A program director must meet one of the following:

1. **Graduate Degree** in a child-related field (e.g., education, nursing, recreation) + 6 months of experience.
2. **Bachelor's Degree or Endorsement** in a child-related field + 1 year of experience.
3. **College Credit:** 48 semester hours (12 in child-related subjects) + 1 year of experience.
4. **Two years of program experience** (including 1 year in a supervisory role) + one of the following:
    a. **Early childhood certificate** (30 semester hours).
    b. **Child development credential** (includes coursework, supervised experience, and competency evaluation).
    c. **Montessori certification** from a recognized organization.

Management Training (if lacking experience):

- Must complete one of the following:
    - One college course in business.
    - 10 hours of management training.
    - A child care management course covering planning, budgeting, staffing, and monitoring.

Specialized Programs:

- Directors of **therapeutic or special needs programs** must have relevant education and experience in group care for children with special needs.

Summary of Program Leader Qualifications

Age & Education Requirement:

- Must be **at least 18 years old.**
- Must have **completed high school or equivalent**.

Qualifications Options (Must meet one of the following):

1. Meet **Program Director qualifications** as per **8VAC20-780-190**.
2. Hold a **bachelor's degree or endorsement** in a **child-related field** (e.g., education, nursing, recreation).
3. Have **three months of program experience** plus one of the following:
    a. **Early childhood certificate** (one year, 30 semester hours).
    b. **Child development credential** from an approved organization.
    c. **Montessori teaching diploma** from a recognized organization.
4. Have **six months of supervised programmatic experience** and complete:
    a. **At least 12 hours of training** (within six months before or one month after starting), covering:
        i. Child development
        ii. Playground safety
        iii. Health and safety
        iv. Preventing and reporting child abuse & neglect

Training Hour Requirements (Based on Hire Date):

- **Hired after June 1, 2006:** 16 hours
- **Hired after June 1, 2007:** 20 hours
- **Hired after June 1, 2008:** 24 hours

Specialized Programs:

- Leaders in **therapeutic or special needs programs** must have **at least three months** of experience in group care for children with special needs.

Short-Term Programs:

- Program leaders need **only one season of experience** (minimum **200 hours**), of which **up to 24 hours** can be formal training.

Aides:

- Must be **at least 16 years old.**

Child-to-Caregiver Ratios

1. **Birth to 16 months** – 1:4
2. **16 months to 24 months** – 1:5
3. **2-year-olds** – 1:8
4. **3-year-olds to school-age eligible** – 1:10
5. **School-age eligible to 9 years** – 1:18
6. **9 years to 12 years** – 1:20

Note: When children are in ongoing mixed-age groups, the staff-to-child ratio and group size applicable to the youngest child in the group shall apply to the entire group

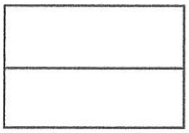

- **Insurance:**
  - Comprehensive liability insurance to cover accidents, injuries, and property damage.

9. Risk Management

- **Potential Risks:**
  - Low enrollment during the initial months, competition from other childcare services, staff turnover.
- **Mitigation Strategies:**
  - Aggressive marketing during the opening phase, offering promotional rates, and seeking community involvement.
  - Ongoing staff training and retention programs.
  - Continuous monitoring and adaptation of services based on customer feedback

10. Growth and Expansion Plans

- **Short-Term Goals:**
  - Successfully establish the daycare with full staffing, high enrollment, and consistent service quality.
- **Long-Term Goals:**
  - Expand services as demand grows (e.g., adding new locations and programs)
  - Offer additional educational or enrichment programs for children.
  - Build partnerships with local schools, employers, and community organizations.

This daycare facility will serve as a vital community resource for families in Danville, offering flexible childcare options for parents working outside of typical business hours, as well as a safe and reliable service for visitors to the city. With comprehensive planning, a strong marketing strategy, and a focus on quality care, the facility aims to become a trusted partner for families, as well as the city of Danville helping all citizens meet their childcare needs while contributing to the local economy and community growth.

3b. The zoning district for 1218 w. main street, Danville Virginia 24541 is HRC- Highway Retail Commercial

3c. The surrounding properties:

- Caesars Virginia
- Linden Rose Boutique
- Alterations by Brenda
- Hauser Realty Group
- Hardees
- Masseys Auto Sales
- Family Haircuts
- JTMB Luxury Grooming
- Dr. Gregory D. Howard, Dds

3d. Neighbor hood and community conditions are

3e.. **Pedestrian Flow:**

- **Main Entry Points:** Pedestrians primarily enter the area through designated walkways near the major parking area, from the sidewalks and maybe through the grassed area near the building!
- **Pedestrian Pathways:** Well-marked and wide pedestrian paths are provided along all major entrances and high-traffic areas. These pathways lead directly to key facilities, childcare zones, and common areas.
- **Crosswalks:** There are multiple crosswalks for walking pedestrians on Augusta Ave as well as one on west main street if they park in the casino parking lots. There are separate areas for pedestrians as well as vehicles on the route to Kidzplay childcare.
- **Pedestrian Destination Points:** Key destinations, such as KidzPlay childcare, are located along primary pedestrian routes, with clear signage directing families and visitors to these areas.
- **Peak Times:** During morning and evening hours, foot traffic will increase as parents drop off or pick up children. Staff and signage will be available during these times as well as for the nightly care being offered lit signs and lit walking/parking areas!

2. Vehicle Flow:

- **Primary Access Roads:** Vehicles access the site through clearly marked parking and drop off circle area with sufficient capacity to handle peak traffic. These roads are West main street and Augusta Avenue which have been maintained by the city just recently and are in great condition
- **Parking Areas:** Vehicle parking areas are located near the main pedestrian entrances. These parking zones are divided into sections for short-term and long-term parking, with designated spaces for families and staff those needing accessible parking while at Kidzplay.
- **Vehicle Drop-Off Zones:** A designated, safe drop-off zone near KidzPlays main entrance has been established. This area will allow parents to quickly drop off or pick up children without blocking pedestrian pathways or parking areas.
- **Vehicle Entry and Exit Patterns:** Vehicles will enter through one main entrance and exit through a separate exit point to minimize congestion. To ensure a smooth traffic flow during peak hours.
- **Pedestrian and Vehicle Interaction Points:** At areas where pedestrian pathways intersect with vehicle traffic (such as crosswalks or drop-off zones), special attention should be paid to safety. Speed bumps, traffic signals, or crossing guards can be employed to slow vehicle speeds and ensure safe crossings.

3. Combined Traffic Flow and Safety:

- **Signage and Wayfinding:** Clear signage will guide both pedestrians and vehicles to their destinations while providing safety information. This includes directional signs, speed limits, and pedestrian warnings near vehicle zones.
- **Surveillance and Monitoring:** Security cameras and staff members will be positioned at key intersections to monitor the flow of both pedestrians and vehicles, ensuring safety and smooth transitions.

- **Peak Traffic Management:** During peak drop-off and pick-up times, a staff member will direct the flow of traffic in the Kidzplay parking lot to ensure a steady flow of traffic safely.
- **Emergency Access:** Special consideration will be given to emergency vehicle access, with clear, unobstructed routes for fire trucks, ambulances, and other emergency vehicles at all times.

3f. How Kidzplay Functions as an Adequate Public Facility

- Kidzplay provides **24-hour childcare and education** for children aged **6 weeks to 13 years**, ensuring that families have reliable and flexible childcare.This service **supports working parents and visiting patrons** of Danville, particularly those employed in industries with non-traditional work hours, like the casino, healthcare, and emergency services.
- Kidzplay is strategically located next to the newly constructed casino, benefiting from the **existing expanded traffic infrastructure.**
- The facility is already **integrated into the city's main traffic flow**, minimizing any additional strain on public roads and transportation systems.
- By providing **flexible childcare**, Kidzplay **enables more residents to participate in the workforce**, helping sustain and grow Danville's economy.
- More working parents mean **increased tax revenue** and economic activity, allowing the city to maintain and enhance its public services.
- As a **licensed childcare provider**, Kidzplay contributes to **early childhood education**, preparing children for school and reinforcing Danville's overall educational framework.

- Offering **reliable childcare solutions** reduces absenteeism and job instability for working families, ensuring a stronger, more stable workforce for local businesses.
- Kidzplay isn't just a childcare facility—it's an **essential public service** that directly supports Danville's **growing economy, workforce, and infrastructure**. By aligning with the city's development plans, contributing to tax revenue, and ensuring quality childcare options, Kidzplay meets the criteria of an Adequate Public Facility.

Traffic Impact analysis

The purpose of this Traffic Impact Analysis (TIA) is to evaluate the potential effects of Kidzplay's operations on local traffic patterns and determine whether existing infrastructure can accommodate anticipated vehicle volumes.

2. Site Location & Accessibility

Kidzplay is situated near the main road that serves the casino, benefiting from a traffic pattern already designed for high vehicle capacity. The facility's entrance and exit points are positioned to minimize disruptions to existing traffic flow. Key considerations include:

- Proximity to the casino ensures that roadways are already widened and designed for increased traffic volumes.
- Direct access to a major thoroughfare allows for efficient ingress and egress.
- Adequate parking facilities to accommodate drop-offs, pick-ups, and staff vehicles.

3. Anticipated Traffic Volume

The expected vehicle traffic at Kidzplay includes:

- **Peak Hours:** 6:00 AM – 9:00 AM and 4:00 PM – 7:00 PM (traditional work shifts) and 10:00 PM – 1:00 AM (casino workforce shift changes).
- **Daily Drop-offs & Pick-ups:** Estimated at 50-100 vehicles per day, with staggered timing reducing congestion.
- **Staff Commuting:** Approximately 15-20 employees per day, arriving and departing at varied times.

4. Existing Roadway Conditions

- The casino's development has already led to the widening of surrounding roads and improved traffic signal timing.
- Traffic signals and pedestrian crossings have been installed to manage high-traffic periods effectively.
- Public transit routes are accessible, providing alternative commuting options for staff and patrons.

5. Traffic Impact & Mitigation Strategies

- **Minimal Additional Strain on Traffic:** Since the surrounding infrastructure was designed for high traffic volumes, Kidzplay's traffic impact is expected to be **negligible to moderate**.
- **Efficient Parking & Drop-off System:** Dedicated drop-off/pick-up lanes ensure smooth vehicle movement, reducing congestion on the main road.
- **Traffic Flow Coordination with Casino:** Alignment with casino peak hours prevents unnecessary congestion.
- **Signage & Traffic Control Measures:** Clear directional signage and designated entry/exit points will help manage traffic flow safely.

6. Conclusion & Recommendations

Based on this analysis, Kidzplay's traffic impact is expected to be **manageable within existing roadway capacity**. The surrounding infrastructure is well-equipped to handle projected vehicle volumes, and mitigation strategies will further minimize congestion risks. No additional road expansions or major modifications are required at this time.

It is recommended that:

1. Regular traffic monitoring be conducted post-opening to assess any unforeseen issues.
2. Coordination with local traffic authorities ensures optimal road use planning.
3. Continued collaboration with the casino and local businesses maintains efficient traffic flow.

Kidzplay's strategic location, existing infrastructure advantages, and proactive traffic management strategies demonstrate its ability to integrate smoothly into Danville's transportation network without negatively impacting traffic conditions

Fiscal impact analysis

Kidzplay provides a wonderful opportunity and economic avenue for the city of Danville, strengthening the local economy while supporting working families. Located adjacent to the newly constructed casino, Kidzplay plays a key role in the city's financial landscape. This Fiscal Impact Analysis (FIA) evaluates the financial contributions and costs associated with Kidzplay, focusing on its impact on the local economy, tax revenue, and public sector expenditures.

2. Revenue Generation

Kidzplay is expected to contribute to Danville's economy through various revenue streams:

- **Property Taxes:** As a licensed childcare facility, Kidzplay will contribute to local property tax revenue.
- **Sales Tax Revenue:** Purchases of supplies, food, and educational materials will generate additional sales tax income for the city.
- **Employment & Income Taxes:** With an estimated 15-20 employees per day, Kidzplay will support local employment, contributing payroll taxes and employee spending in the community.

- **Increased Workforce Participation:** By providing flexible childcare, more residents can join or remain in the workforce, increasing local productivity and income tax revenues.

3. Public Service Costs

Kidzplay's operations will require certain public services but are expected to have a minimal impact on city expenses:

- **Infrastructure & Utilities:** The facility benefits from existing road expansions and utility systems, reducing additional municipal costs.
- **Emergency Services:** The childcare center will comply with safety and health regulations, ensuring minimal strain on emergency response services.
- **Public Education Synergy:** Kidzplay's early childhood education programs may reduce future educational intervention costs by preparing children for school readiness.

4. Economic & Community Benefits

- **Support for Local Businesses:** Providing reliable childcare enables parents to work varied shifts, especially within casino and hospitality industries, fostering economic stability.
- **Job Creation:** Direct employment at Kidzplay and indirect job support through supplier and service contracts.
- **Long-Term Growth:** Improved childcare options enhance Danville's attractiveness for young families, encouraging population growth and housing market stability.

5. Conclusion & Recommendations

The fiscal impact of Kidzplay is **positive**, generating tax revenues, supporting workforce stability, and enhancing community services with minimal added costs. To maximize benefits, it is recommended that:

1. The city offers potential incentives for childcare providers to expand operations.
2. Continued collaboration with local businesses and government agencies ensures sustainable economic integration.
3. Periodic financial assessments track long-term economic contributions and areas for improvement.

Kidzplay's presence in Danville aligns with fiscal sustainability goals, fostering economic resilience and community growth.

Parking and site Circulation analysis

Environmental Impact Statement
KidzPlay Childcare Facility
1218 West Main Street

1. Introduction

KidzPlay is a 24-hour childcare provider located at 1218 West Main Street, dedicated to offering quality childcare services to families within the community. This Environmental Impact Statement (EIS) assesses the potential environmental effects of operating the childcare facility and outlines mitigation strategies to minimize negative impacts.

2. Project Description

The facility operates around the clock to provide safe and structured childcare services. The property includes indoor play areas, learning spaces, and an outdoor play area designed for children's recreational activities. The facility is expected to accommodate a high volume of daily foot traffic, as well as deliveries and waste management operations.

3. Environmental Impact Assessment

3.1 Air Quality

Minimal emissions are anticipated as the facility does not involve industrial activities. However, vehicle traffic from parents, staff, and delivery services could contribute to local air pollution.

Mitigation Measures:

- Encourage carpooling and alternative transportation such as biking or public transit.

- Install air purification systems to ensure high indoor air quality.

3.2 Noise Pollution

The continuous operation of the facility may result in increased noise levels, particularly from outdoor play activities and vehicle movement.

Mitigation Measures:

- Plant flowers and bushes where needed.
- Designate specific play hours to minimize noise disturbances in the evening.

3.3 Waste Management

Daily childcare operations will generate waste, including food waste, diapers, and paper products.

Mitigation Measures:

- Implement a robust recycling program.
- Use eco-friendly, biodegradable materials where possible.

3.4 Water and Energy Usage

Increased water and energy consumption is expected due to daily operations, cleaning, and food preparation.

Mitigation Measures:

- Install energy-efficient lighting and appliances.
- Use water-saving fixtures and promote conservation practices among staff.

3.5 Impact on Local Ecosystem

While the facility itself is built on previously developed land, outdoor play areas may influence local flora and fauna.

Mitigation Measures:

- Use native plants for landscaping to support local biodiversity.
- Ensure responsible waste disposal to prevent littering and contamination.

4. Conclusion

KidzPlay is committed to minimizing its environmental footprint while providing essential childcare services to the community. Through the implementation of sustainable practices, the facility aims to operate responsibly while reducing negative environmental impacts. Continued monitoring and adjustments will be made as needed to ensure compliance with environmental standards and best practices.

4. Conclusion

KidzPlay is committed to minimizing its environmental footprint while providing essential childcare services to the community. Through the implementation of sustainable practices, the facility aims to operate responsibly while reducing negative environmental impacts. Continued monitoring and adjustments will be made as needed to ensure

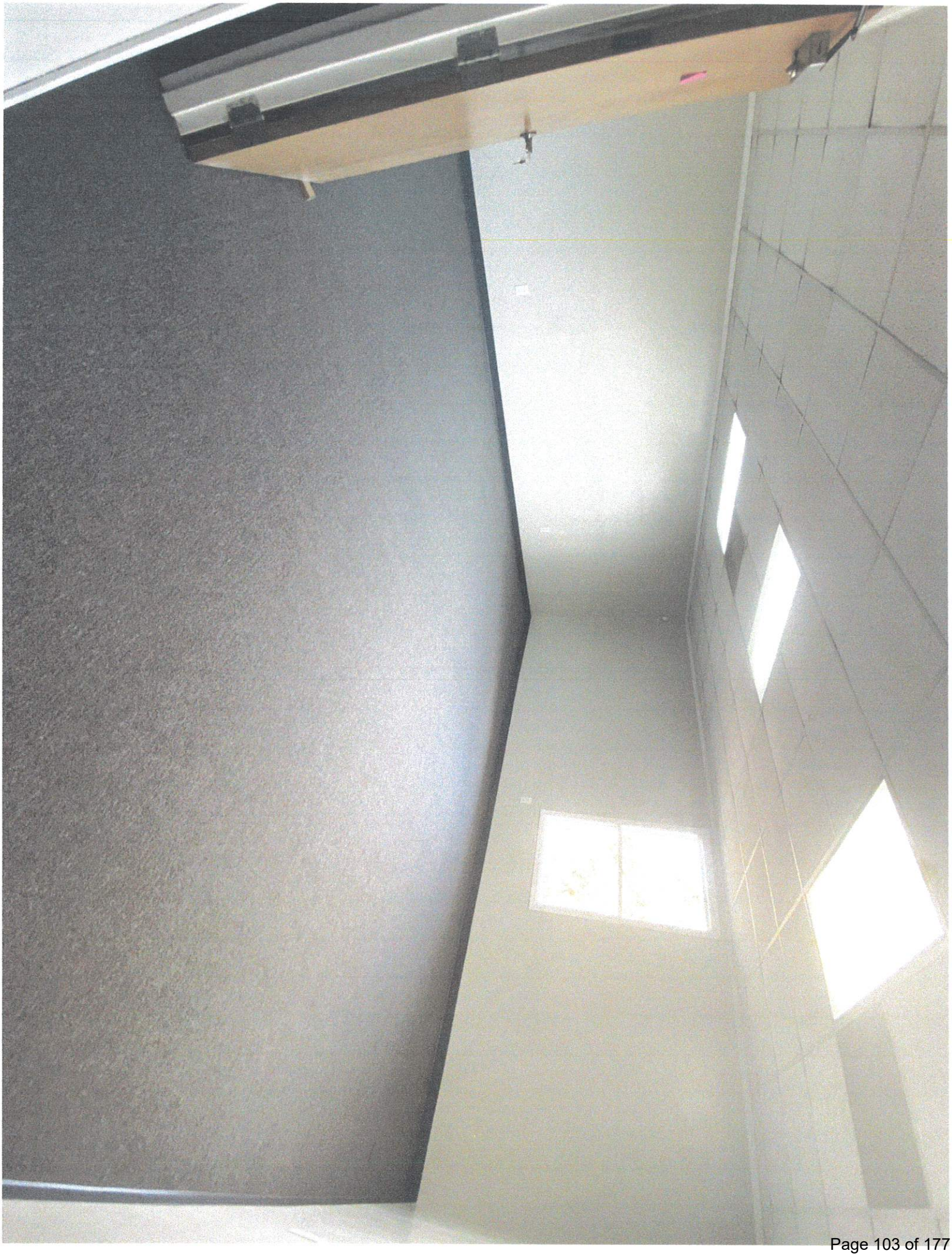

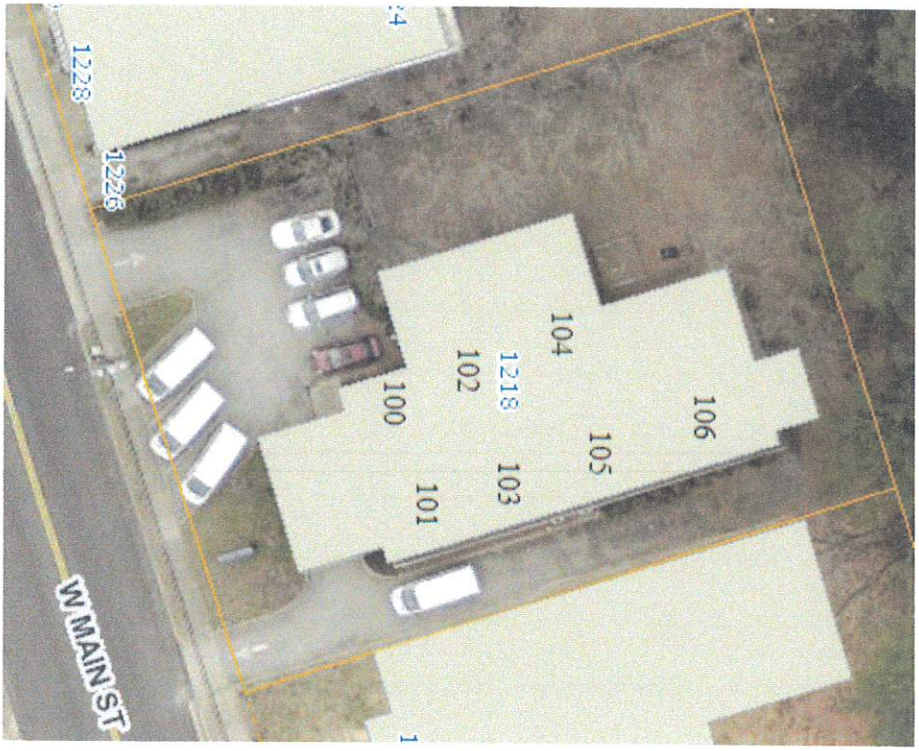
106
105
104
1218
103
102
101
100
1
W MAIN ST
1226
1228

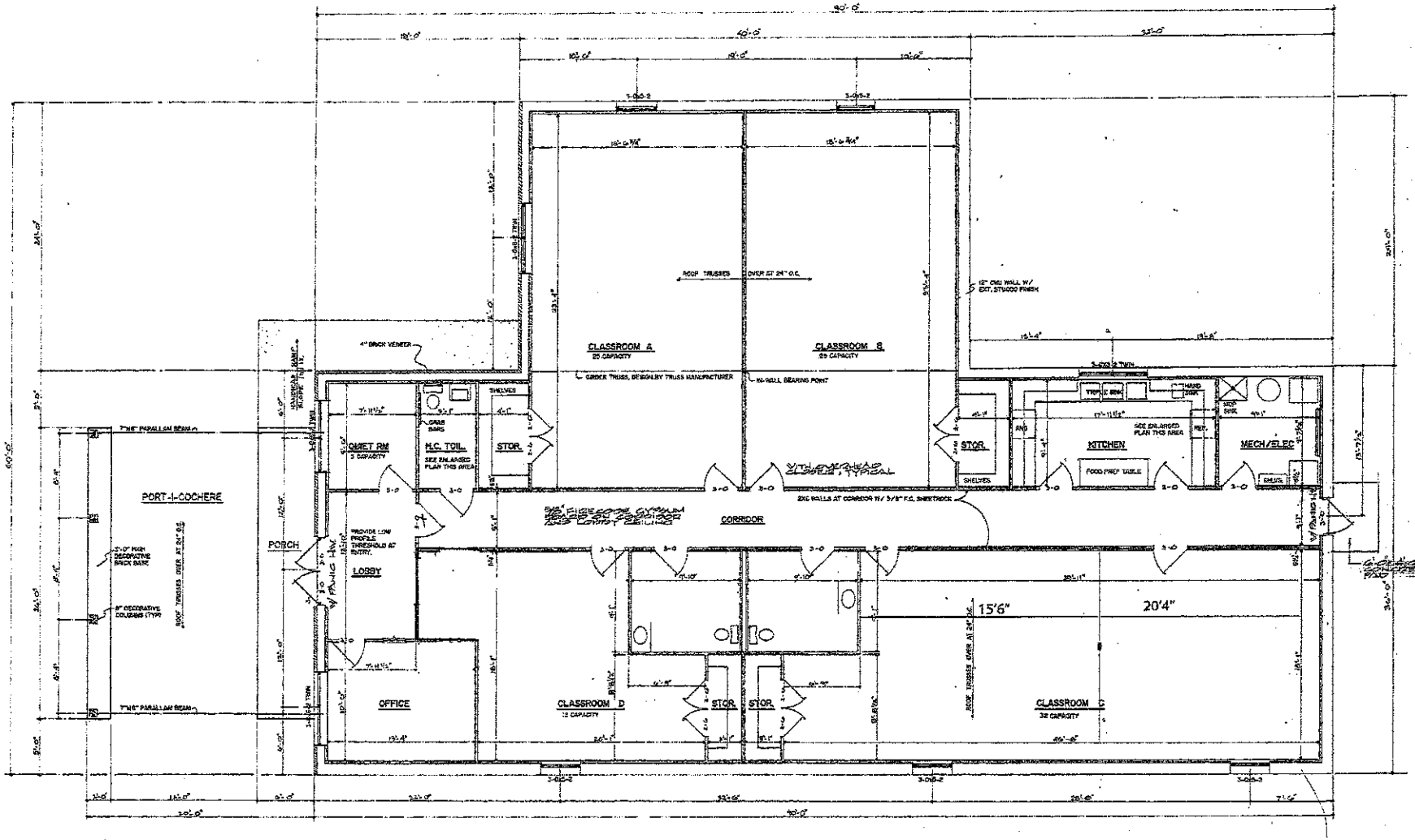

GENERAL NOTES AND SPECIFICATIONS:

1. THIS CONTRACTOR SHALL FULLY COMPLY WITH THE CURRENT EDITION OF THE VIRGINIA UNIFORM STATEWIDE BUILDING CODE. ANY WORK KNOWINGLY PERFORMED CONTRARY TO SUCH LAWS, ORDINANCES OR REGULATIONS SHALL BE THE ASSUMED RESPONSIBILITY OF THE CONTRACTOR.
2. THE CONTRACTOR SHALL BE RESPONSIBLE FOR VERIFYING ALL DIMENSIONS AND CONDITIONS PRIOR TO CONSTRUCTION START-UP. ANY DISCREPENCY FOUND WITHIN THESE DOCUMENTS SHALL BE BROUGHT TO THE ATTENTION OF THE DESIGNER PRIOR TO PROCEEDING WITH ANY WORK.
3. THE DESIGNER WILL NOT BE RESPONSIBLE FOR AND WILL NOT HAVE ANY CONTROL OVER CONSTRUCTION MEANS, METHODS, TECHNIQUES, SEQUENCES, OR PROCEDURES, OR FOR SAFETY PRECAUTIONS AND PROGRESS IN CONNECTION WITH THE WORK, AND WILL NOT BE RESPONSIBLE FOR THE FAILURE OF THE CLIENT, OR HIS CONTRACTORS, SUB-CONTRACTORS, OR ANYONE PERFORMING ANY OF THE WORK, TO CARRY OUT THE WORK IN ACCORDANCE WITH THESE CONTRACT DOCUMENTS.
4. IN AREAS WHERE THESE DRAWINGS DO NOT ADDRESS METHODOLOGY, THE CONTRACTOR SHALL BE BOUND TO PERFORM IN STRICT COMPLIANCE WITH THE MANUFACTURERS WRITTEN INSTRUCTIONS AND/OR SPECIFICATIONS AND RECOMMENDATIONS.
5. THESE DRAWINGS ARE ARCHITECTURAL IN NATURE AND ALL ENGINEERING REQUIREMENTS SHALL BE DETERMINED AND PERFORMED BY OTHERS AS REQUIRED WITHIN THESE DRAWINGS.
6. ALL DIMENSIONS ARE TO THE FACE OF STUD UNLESS NOTED OTHERWISE.
7. ALL FRAMING THAT COMES IN CONTACT WITH MASONRY SHALL BE PRESSURE TREATED.
8. PROVIDE PANIC HARDWARE AT ALL EMERGENCY EXITS.
9. DOORS IN CORRIDOR TO BE WOOD SOLID CORE B- LABEL FIREDOORS W/ METAL FRAMES.
10. PROVIDE LOW PROFILE THRESHOLD AT FRONT ENTRANCE.
11. ATTIC ACCESS TO BE PROVIDED IN CLG OF BOYS ROOM, PRIVATE ACCORDINGLY.

LARRY W. WRIGHT - ARCHITECT
436 HOMESTEAD TRAIL
COLLINSVILLE, VIRGINIA 24078
(703) 647-5281

APPLE TREE CHILDREN'S CENTER, INC.
DANVILLE, VIRGINIA

FLOOR PLAN

Drawn By DWW
Designed By DWW
Checked By LWW
Date 8/12/92
Scale 1/8"=1'-0"
Plan Number
Sheet 3 of 7
File Number

COMMONWEALTH OF VIRGINIA
LARRY W. WRIGHT
No. 3286
ARCHITECT

1218 W Main St

VA-238

VA-238

2025 AERIAL IMAGERY OF SUBJECT PROPERTY

Prepared by:
Planning Division
3/10/2025

N

DANVILLE VIRGINIA

Disclaimer: Information contained on this map is to be used for reference purposes only. The City of Danville is not responsible for any inaccuracies herein contained. The City of Danville makes no representation of warranty as to this map's accuracy, and in particular, its accuracy in labeling, dimensions, contours, property boundaries, or placement or location of any map features thereon. No responsibility is assumed for damages or other liabilities due to the accuracy, availability, use or misuse of the information herein provided.

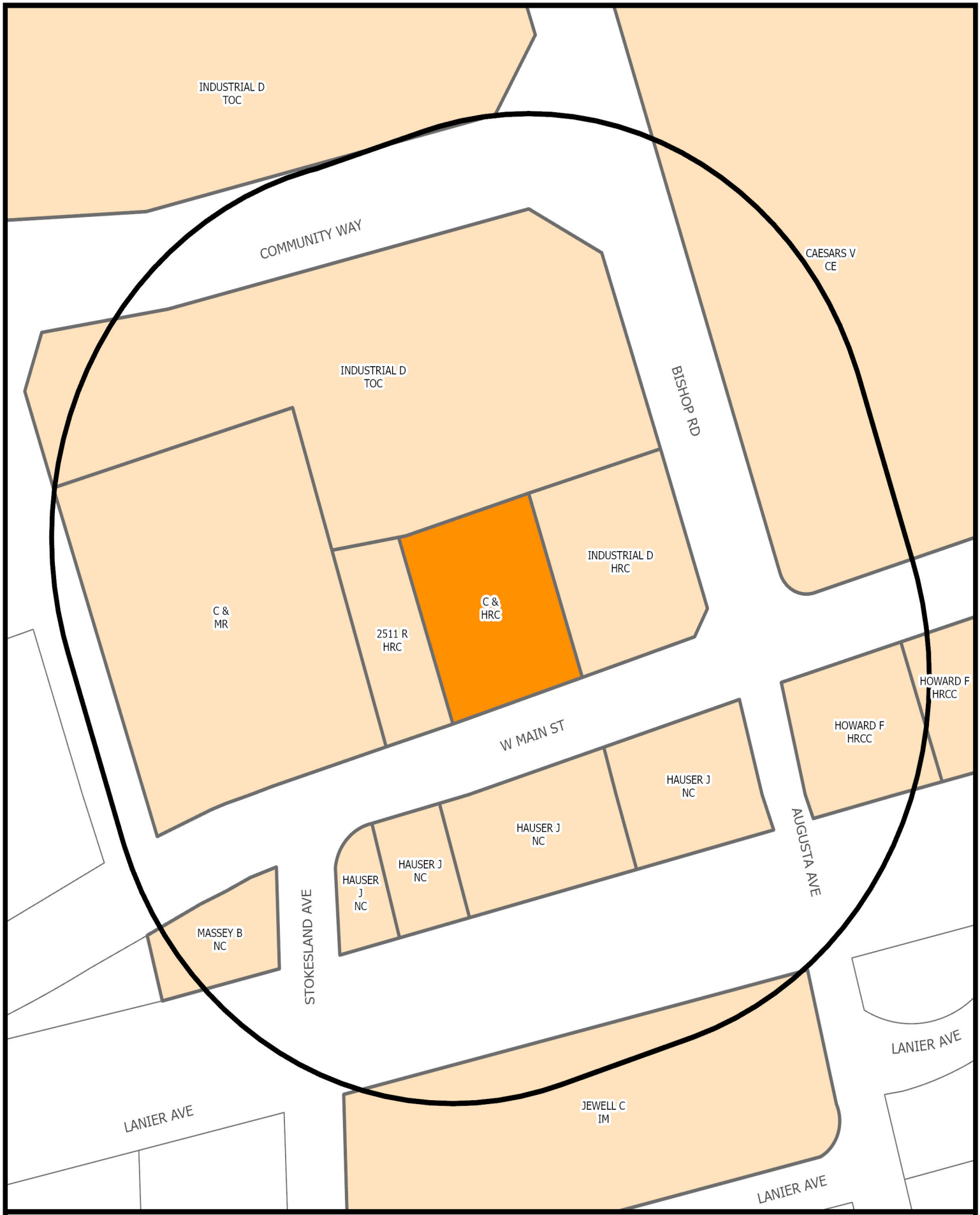

SURROUNDING PROPERTY OWNERS AND ZONING WITHIN 300 FEET OF SUBJECT PROPERTY

Prepared by:
Planning Division
3/10/2025

N

DANVILLE VIRGINIA

Disclaimer: Information contained on this map is to be used for reference purposes only. The City of Danville is not responsible for any inaccuracies herein contained. The City of Danville makes no representation of warranty as to this map's accuracy, and in particular, its accuracy in labeling, dimensions, contours, property boundaries, or placement or location of any map features thereon. No responsibility is assumed for damages or other liabilities due to the accuracy, availability, use or misuse of the information herein provided.

CITY OF DANVILLE
Community Development
Division of Planning and Zoning

MEMORANDUM

DATE: APRIL 7, 2025
TO: CITY COUNCIL
FROM: CITY PLANNING COMMISSION
RE: SPECIAL USE PERMIT APPLICATION PZ25-00164

Special Use Permit application PZ25-00164 filed by Christine Fuston to allow a child day care center in accordance with Article 3.M Section C Item 6 at Parcel 51471 (1218 West Main Street)

RECOMMENDATION

The Planning Commission, at their April 7, 2025, meeting voted 6-0 to recommend approval of Special Use Permit application PZ25-00164.

Steve Petrick RB

Mr. Steve Petrick, Chair

Council Letter
City of Danville, Virginia

CL - 2016 **NEW BUSINESS C.**

City Council REGULAR MEETING

Meeting Date: May 6, 2025

Subject: Consideration of Rezoning Application to Rezone Parcel 78585 (Vandola Road).

From: Renee Burton, Division Director of Planning

COUNCIL ACTION

1. Public Hearing

2. An Ordinance Granting Rezoning Application PZ25-00194 filed by Blackstone Building Group LLC to Rezone Parcel 78585 (Vandola Road) from S-R Suburban Residential to A-R Attached Residential.

SUMMARY

Blackstone Building Group LLC received approval for a Special Use Permit (SUP) for a Planned Unit Development (PUD) on Parcel IDs 77925, 71143, 77922, 77921, 71138, 77920, 77919, 77918, and 77608 (Vandola Road) in July 2024. An alteration of the development plans necessitates that Blackstone Building Group LLC provide a new application for review. Application PZ25-00194 has been submitted for the rezoning of Parcel ID 78585 (a subdivision of Parcel ID 77925) from S-R, Suburban Residential to A-R, Attached Residential for the construction of thirty-one (31) attached dwellings. Approval of the requested rezoning will void the previous approval of a SUP for a PUD.

Additional applications must be submitted to complete the project on parcels that were previously included in the PUD. The Planning Division Staff is coordinating with Blackstone Building Group LLC as they submit the necessary materials for each application.

Application PZ25-00194 is a request to rezone Parcel ID 78585 in anticipation of the construction of thirty-one (31) attached dwellings. Each dwelling will be on a separate lot and the surrounding open space and recreation area will be managed by a Home Owners Association (HOA). It is required that the development provides open space and recreational areas at a minimum of 25% of the common space. The applicant has provided additional materials to identify the layout and equipment that will be installed in these areas to encourage recreation and activity.

Parcel 78585 currently has inadequate water pressure to serve the units and the fire suppression system. The applicant, Blackstone Group, LLC, is coordinating a water extension project with the Department of Utilities to upgrade the system. The applicant is also in discussion with the Division of Engineering regarding the development of a public road to serve the thirty-one (31) proposed units. Development of units as proposed in this rezoning request will allow the applicant the opportunity to apply for a reimbursement program for road construction.

Staff recommended to the Planning Commission that the conditions of the previous PUD, which were

approved by City Council, be placed on this rezoning request. The PUD conditions relevant to the development of Parcel 78585 are:

1. The developer will complete a Traffic Impact Analysis in consultation with the City of Danville and implement the recommendations (TIA was completed 09-21-24);
2. A minimum of 35% of the building exteriors will be masonry;
3. The height of each building may not exceed three (3) stories or 45 feet; and
4. Parking shall not be placed in the front yard (Vandola Road) of the development.

Twenty-nine (29) notices were sent to surrounding property owners within three hundred (300) feet of the subject property. Nine (9) notices were received. Six (6) were not opposed. Three (3) were opposed.

On April 7, 2025, the City Planning Commission voted 6-0 to recommend approval of Rezoning Request PZ25-00194 to rezone Parcel 78585 (Vandola Road) with the following conditions:

1. The developer will complete a Traffic Impact Analysis in consultation with the City of Danville and implement the recommendations (TIA was completed 09-21-24);
2. A minimum of 35% of the building exteriors will be masonry;
3. The height of each building may not exceed three (3) stories or 45 feet; and
4. Parking shall not be placed in the front yard (Vandola Road) of the development.

RECOMMENDATION

It is recommended that City Council adopt an Ordinance to rezone Parcel 78585 (Vandola Road) from S-R, Suburban Residential to A-R, Attached Residential with the following conditions:

1. The developer will complete a Traffic Impact Analysis in consultation with the City of Danville and implement the recommendations (TIA was completed 09-21-24);
2. A minimum of 35% of the building exteriors will be masonry;
3. The height of each building may not exceed three (3) stories or 45 feet; and
4. Parking shall not be placed in the front yard (Vandola Road) of the development.

Attachments

1. Ordinance
2. Application
3. Proposed Subdivisions 1-31
4. Plans
5. Vandola Aerials Map
6. Vandola Owners Zoning Map
7. Planning Commission Recommendation

PRESENTED:_____

ADOPTED: _____

ORDINANCE NO. 2025____.____

AN ORDINANCE GRANTING REZONING APPLICATION PZ25-00194 FILED BY BLACKSTONE BUILDING GROUP LLC TO REZONE PARCEL 78585 (VANDOLA ROAD) FROM S-R SUBURBAN RESIDENTIAL TO A-R ATTACHED RESIDENTIAL.

NOW THEREFORE, BE IT ORDAINED, by the Council of the City of Danville, Virginia, that the report of the Planning Commission recommending approval of Rezoning Application PZ25-00194, filed by Blackstone Building Group LLC to rezone Parcel 78585 (Vandola Road) from S-R Suburban Residential to A-R Attached Residential, be and the same is hereby received; with the following conditions:

1. The developer will complete a Traffic Impact Analysis in consultation with the City of Danville and implement the recommendations (TIA was completed 09-21-24); and
2. A minimum of 35% of the building exteriors will be masonry; and
3. The height of each building may not exceed three (3) stories or 45 feet; and
4. Parking shall not be placed in the front yard (Vandola Road) of the development.

AND BE IT FURTHER ORDAINED, that in consideration of said report and the public hearing this day held by Council, Rezoning application PZ25-00194 filed by Blackstone Building Group LLC to rezone Parcel 78585 (Vandola Road) from S-R Suburban Residential to A-R Attached Residential is hereby granted and approved, with the following conditions:

1. The developer will complete a Traffic Impact Analysis in consultation with the City of Danville and implement the recommendations (TIA was completed 09-21-24); and
2. A minimum of 35% of the building exteriors will be masonry; and
3. The height of each building may not exceed three (3) stories or 45 feet; and
4. Parking shall not be placed in the front yard (Vandola Road) of the development.

Approved:

_____
Mayor

Attest:

_____
City Clerk

Approved as to
Form and Legal Sufficiency:

_____
City Attorney

CITY OF DANVILLE
Community Development
Division of Planning and Zoning

REZONING APPLICATION

1. An application for rezoning shall be made by the owner, contract purchaser with the owner's written consent, or the owner's agent, of the property on which the proposed use is to be located. The application shall be submitted to the Director of Planning/Zoning Administrator and shall be accompanied by the filing fee as established by the City Council.
2. The application shall include the following information:
    a. A description of the proposed use and, where applicable, the hours of operation and the proposed number of employees/patrons.
    b. A written statement of proposed project compatibility with the following:
        1. The Comprehensive Plan.
        2. The applicable zoning district.
        3. The surrounding properties.
        4. Current and future neighborhood conditions.
        5. Pedestrian and vehicular traffic patterns, on-site and off-site.
        6. Adequate public facilities.
    c. When requested by the Director of Planning/Zoning Administrator, the Planning Commission, or the City Council, the following information shall be provided by the applicant: 1. The architectural elevations and floor plans of proposed building(s). 2. Traffic impact analysis. 3. Fiscal impact analysis. 4. Parking and site circulation analysis. 5. Photographs of property and surrounding area. 6. Environmental impact statement. 7. A preliminary site plan in accordance with the Site Plan Regulations.

PLANNING DIVISION PROVIDED INFORMATION

Application #:	PZ25-00194	PC Meeting Date:	4-7-25
Date Received:	3-10	Received By:	Williams
Parcel ID:	78585	Address:	Yandola Rd
Existing Zoning:	S-R	Proposed Zoning:	A-R

APPLICANT PROVIDED INFORMATION

Applicant: Blackstone Building Group, LLC

Applicant's Address: 4932 Dominion Boulevard, Suite #106 Glen Allen, VA 23060

Applicant's Phone Number: (757) 510-2451

Applicant's Email: rick@longevitysolutions.com

Purpose for Proposed Amendment: Seeking approval for the 31 buildable lots required for construction of proposed buildings #1-4 and Vandola Crescent Lane in Phase 1. Rezoning to accommodate more narrow lots allowed with underlying zoning.

Property Address: Ex ID: 78585 Gross Area/ Net Area: 4 acres +/-

Property Location: N☐ S☐ E☒ W☐ Side of: Vandola Road

Between: Riverside Drive / US-58 and Westover Drive

Proffered Conditions: TBD

Rick Byers /
Blackstone Building Group, LLC 3/10/25
Applicant's Signature Date

Rick Byers /
Blackstone Building Group, LLC 3/10/25
Property Owner's Signature (if not applicant) Date

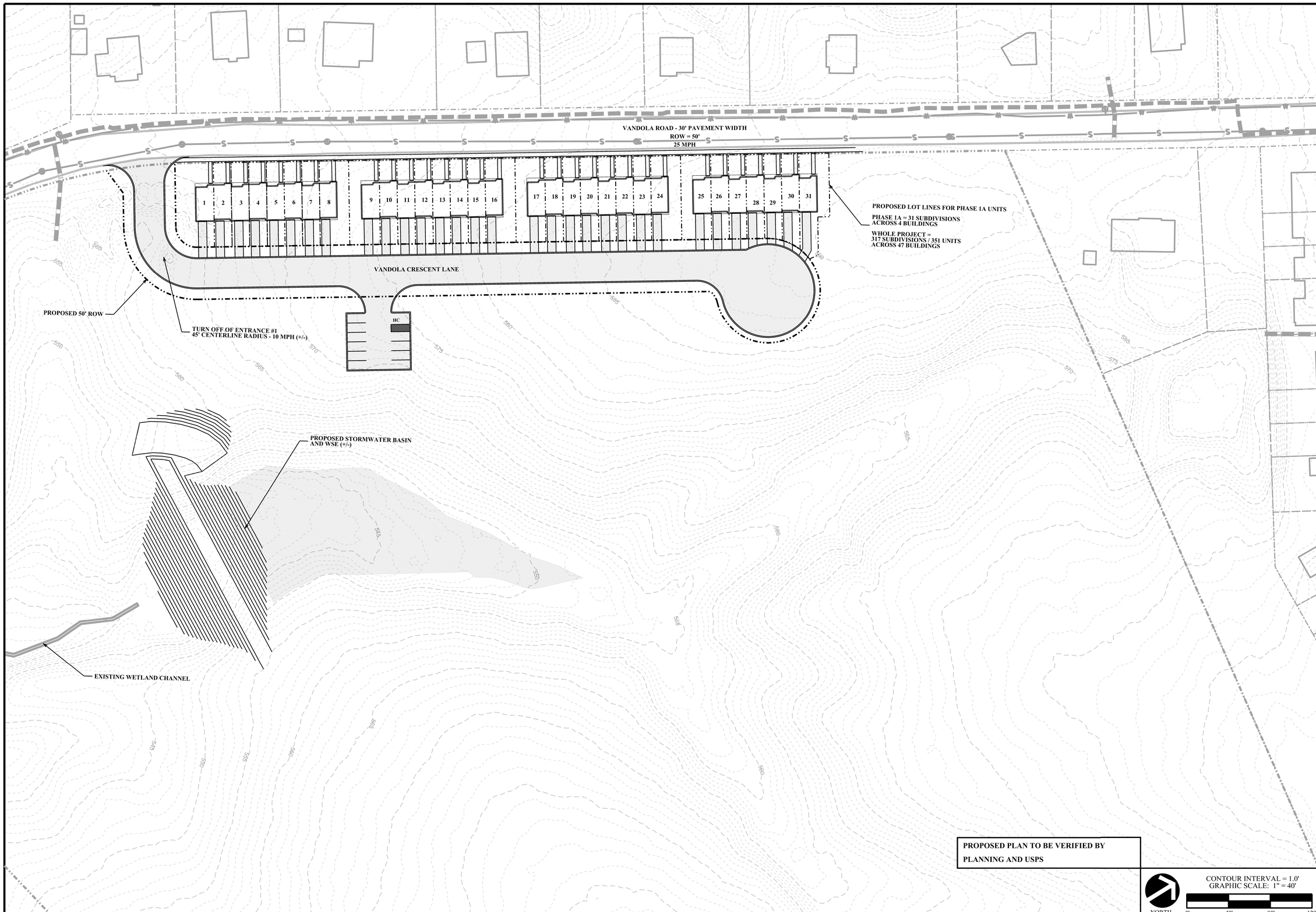

WATERSHED
CONSULTING
P.O. Box 7216
Richmond, VA 23221
(804) 304-4659
WWW.WATERSHEDVA.COM

VANDOLA CRESCENT

PROPOSED SUBDIVISIONS PLAN
UNITS #1-31

CITY OF DANVILLE, VIRGINIA

PROJECT MANAGER:	EA
DESIGNED:	EA
DRAWN:	CA
DESIGN FILE:	file name
DATE:	3/10/25
REVISIONS:	

LONGEVITY SOLUTIONS

SHEET INDEX	
0-COVER	
A-0.00	Cover
2-ARCHITECTURE	
A-1.00	Cluster Mailbox
A-1.50	Wall Bracing plan
A-3.00	Elevations
A-4.00	3-D VIEW
3-PICNIC PAVILLION	
P-1.00	Picnic Pavillion
4-DUMPSTER	
D-1.00	DUMPSTER PAD DETAIL

VANDOLA CRESCENT

ACCESSORY BUILDINGS

PHASE 1

ACCESSORIES

NEW CONSTRUCTION

THE FOLLOWING STRUCTURAL REQUIREMENTS ARE SPECIFIC TO DANVILLE, VIRGINIA
FROST DEPTH-12 INCHES
SNOW LOAD - 20 PSF
ULTIMATE DESIGN WIND SPEED FOR RISK
DESIGN WIND SPEED - 90MPH, 3-SECOND GUST

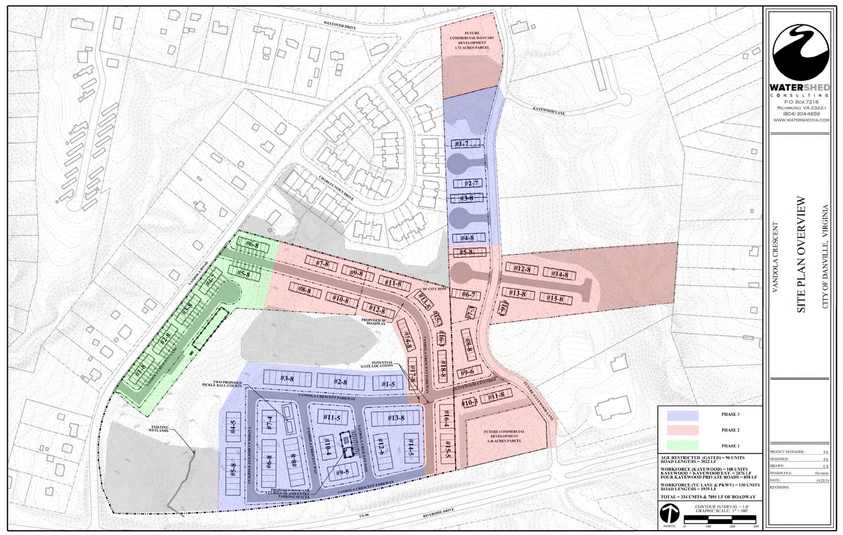

PERMIT SET

NOTE:
1. ALL DIMENSIONS ARE FROM OUTSIDE EDGE OF EXTERIOR WALL SHEATHING OR FACE OF STUD, U.N.O.
2. ALL DOOR & WINDOW HEADERS IN EXTERIOR WALLS TO BE (2) 2X8 U.N.O.
3. ALL INTERIOR DOOR HEADERS TO BE (2) 2X4, U.N.O.
4. PROVIDE PRESSURE TREATED LUMBER @ HOUSE BAND WHERE ALL DECK, PORCH & APPURTENANCES ARE CONNECTED.

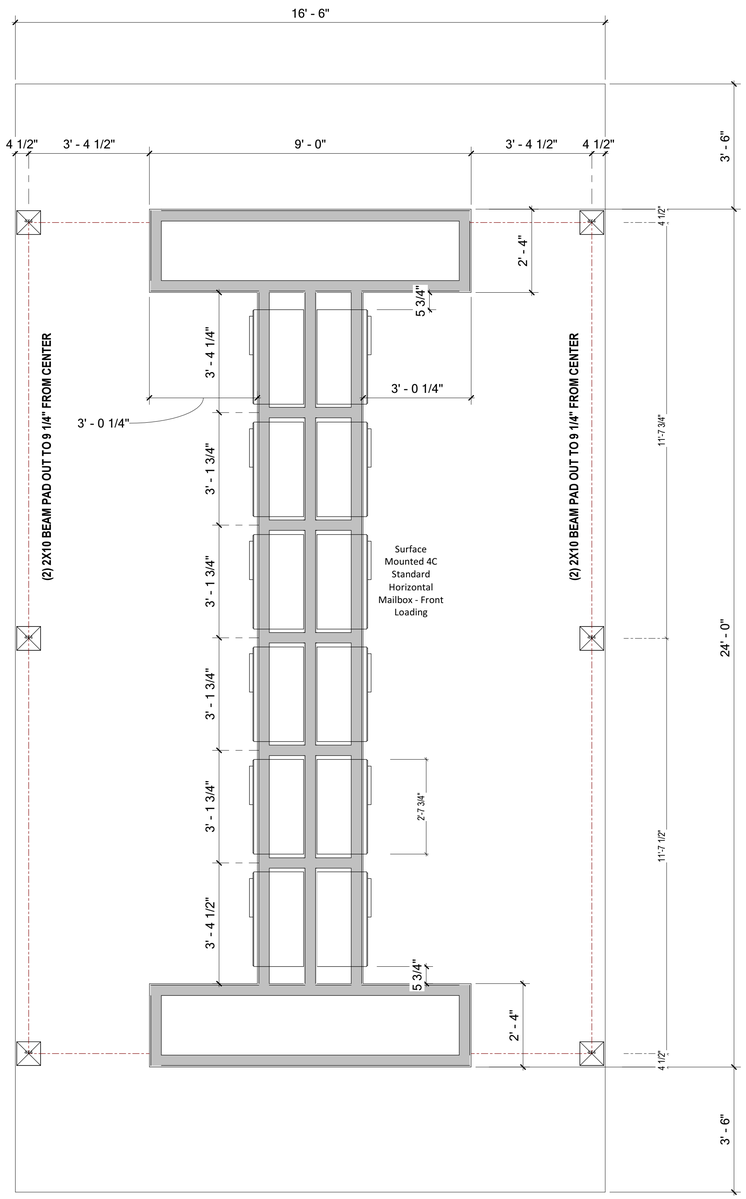

1 FLOOR PLAN
A-1.00

1/2" = 1'-0" WHEN PRINTED ON 24"x36" / ARCH D PAPER SIZE

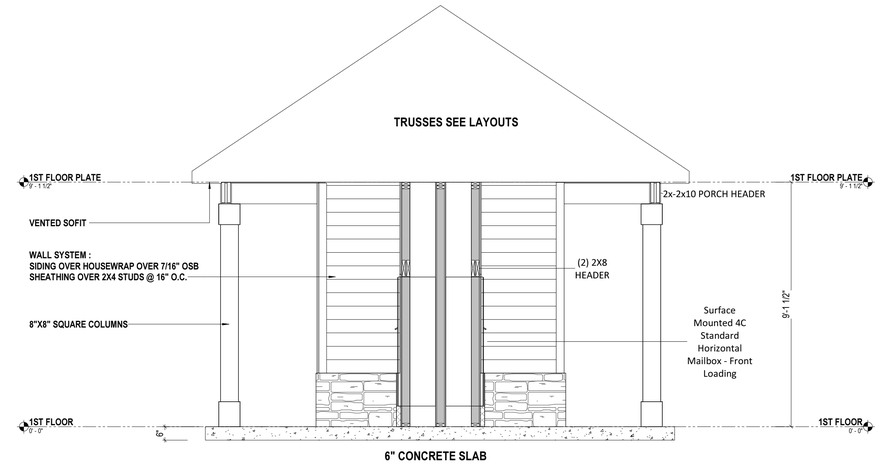

2 BUILDING SECTION 1
A-1.00

3/8" = 1'-0" WHEN PRINTED ON 24"x36" / ARCH D PAPER SIZE

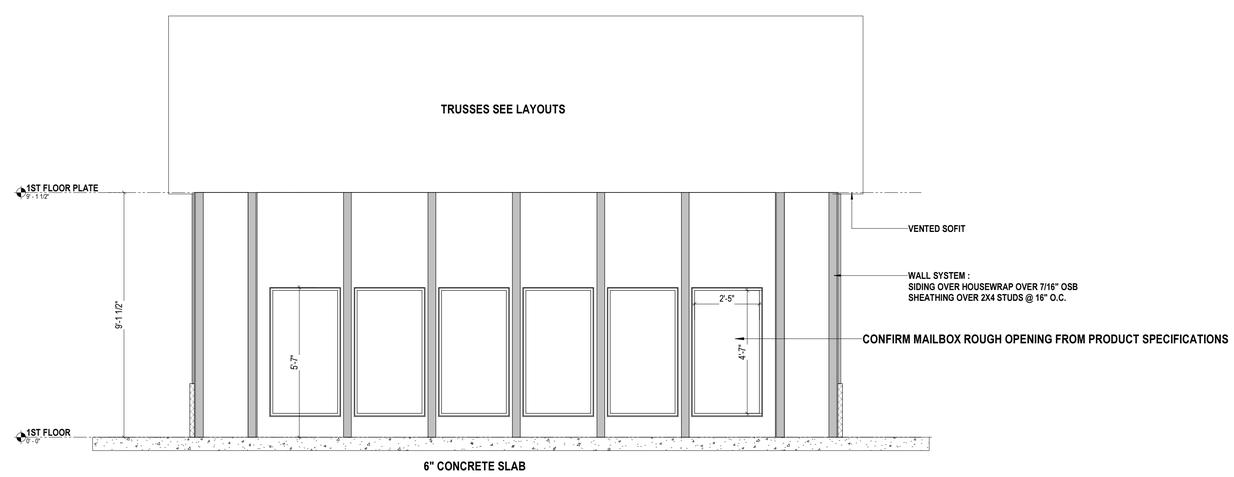

3 BUILDING SECTION 2
A-1.00

3/8" = 1'-0" WHEN PRINTED ON 24"x36" / ARCH D PAPER SIZE

Longevity Home Solutions
age in place • multigenerational • adaptability

Rick Byers
(804) 217-8367
4932 Dominion Blvd
Suite 106
Glen Allen, VA, 23060

CLIENT
LONGEVITY SOLUTIONS

ADDRESS
DANVILLE

PROJECT
MULTI-FAMILY

SERIES
ACCESSORIES

SHEET
Cluster Mailbox

ISSUE DATE
1/24/25

DRAWN BY
PINNACLE DESIGN RVA

SHEET NUMBER
A-1.00

NOTE:
1. ALL DIMENSIONS ARE FROM OUTSIDE EDGE OF EXTERIOR WALL SHEATHING OR FACE OF STUD, U.N.O.
2. ALL DOOR & WINDOW HEADERS IN EXTERIOR WALLS TO BE (2) 2X8 U.N.O.
3. ALL INTERIOR DOOR HEADERS TO BE (2) 2X4, U.N.O.
4. PROVIDE PRESSURE TREATED LUMBER @ HOUSE BAND WHERE ALL DECK, PORCH & APPURTENANCES ARE CONNECTED.

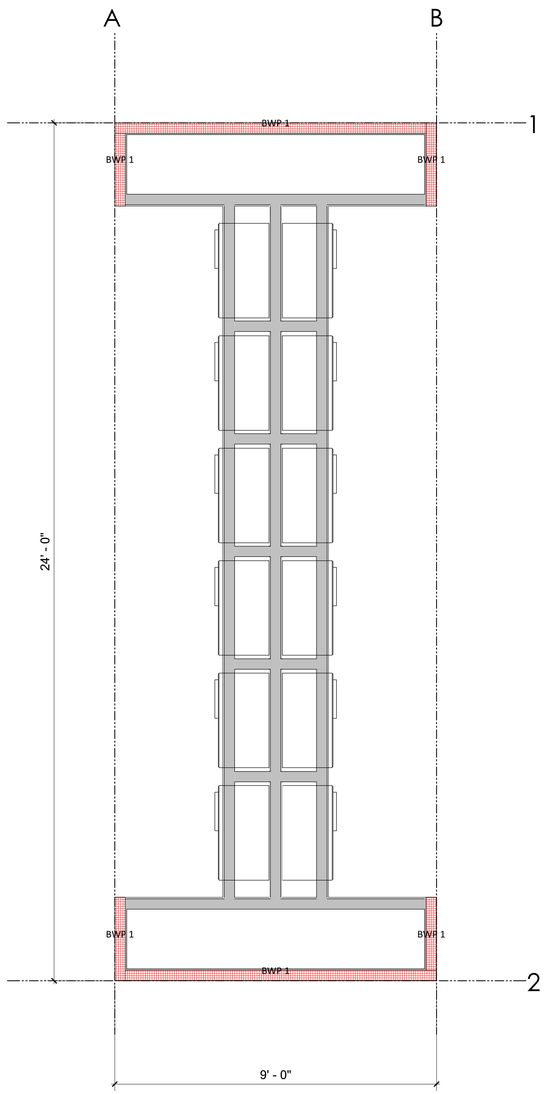

1 A-1.50 **1ST FLOOR PLAN**

1/2" = 1'-0" WHEN PRINTED ON 24"x36" / ARCH D PAPER SIZE

Classic Wall Bracing Worksheet

per 2018 Virginia Residential Code Section R602.10

Ultimate Wind Speed (mph)		115																					
BWL Designation		1		2		A		B															
No. of Floors above BWL		0		0		0		0															
BWP Method		CS-WSP		CS-WSP		CS-WSP		CS-WSP															
Average BWL Spacing (ft)		24		24		9		9															
Tabular Requirement (ft)		3.90		3.90		2.00		2.00															
Adjustments	Exposure	B	1.00	B	1.00	B	1.00	B	1.00														
	Eave-to-Ridge Ht. (ft)	6.58	0.79	6.58	0.79	6.58	0.79	6.58	0.79														
	Max. Wall Ht. (ft)	9.00	0.95	9.00	0.95	9.00	0.95	9.00	0.95														
	No. of BWLs	2	1.00	2	1.00	2	1.00	2	1.00														
	Omit Interior Finish?	Yes	1.40	Yes	1.40	Yes	1.40	Yes	1.40														
	Added Hold-downs?	No	1.00	No	1.00	No	1.00	No	1.00														
	Joints Blocked?	Yes	1.00	Yes	1.00	Yes	1.00	Yes	1.00														
	Fasteners @ 4" o.c.?	Yes	0.83	Yes	0.83	Yes	0.83	Yes	0.83														
Required BWP Length (ft)		3.42		3.42		1.75		1.75															
Actual BWPs	Contributing Length (ft)	BWP	Method	Length	Method	Length	Method	Length	Method	Length	Method	Length	Method	Length	Method	Length	Method	Length	Method	Length	Method	Length	Method	Length
	WSP=actual SFB=actual GB(g,s)=0.5xactual GB(ds)=actual CS-PF=1.5xactual PFG=1.5xactual PFH=4" ABW=4"	1	CS-WSP	9.00	CS-WSP	9.00	CS-WSP	2.33	CS-WSP	2.33													
		2					CS-WSP	2.33	CS-WSP	2.33													
		3																					
		4																					
		5																					
		6																					
		7																					
Actual BWP Length (ft)		9.00		9.00		4.66		4.66															
Actual ≥ Required?		PASS		PASS		PASS		PASS															
BWPs ≤ 20 Apart?		Yes		Yes		Yes		Yes															
≥ 2 Panels in BWL?		Yes		Yes		Yes		Yes															
BWP 10' from Ends?		Yes		Yes		Yes		Yes															
Continuous Sheathing		End 1	End 2	End 1	End 2	End 1	End 2	End 1	End 2	End 1	End 2	End 1	End 2	End 1	End 2	End 1	End 2	End 1	End 2	End 1	End 2	End 1	End 2
End Conditions		1	1	1	1	1	1	1	1														
BWL Compliance		PASS		PASS		PASS		PASS															

To report an error or bug, call 703-324-1842, TTY 711

A Fairfax County, Virginia Publication

Classic VRC2018 - 7/26/2021

Longevity Home Solutions
age in place · multigenerational · adaptability

Rick Byers
(804) 217-8367
4932 Dominion Blvd
Suite 106
Glen Allen, VA, 23060

CLIENT
LONGEVITY SOLUTIONS

ADDRESS
DANVILLE

PROJECT
MULTI-FAMILY

SERIES
ACCESSORIES

SHEET
Wall Bracing plan

ISSUE DATE
1/24/25

DRAWN BY
PINNACLE DESIGN RVA

SHEET NUMBER
A-1.50

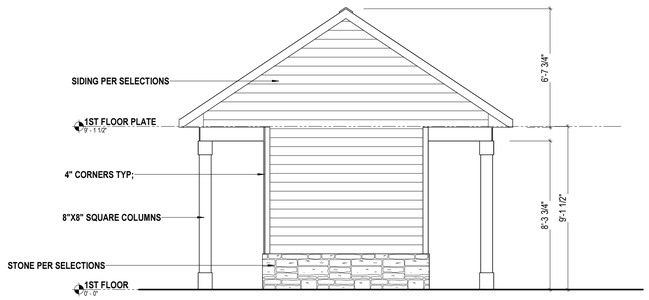

1 FRONT VIEW
A-3.00

1/4" = 1'-0" WHEN PRINTED ON 24"x36" / ARCH D PAPER SIZE

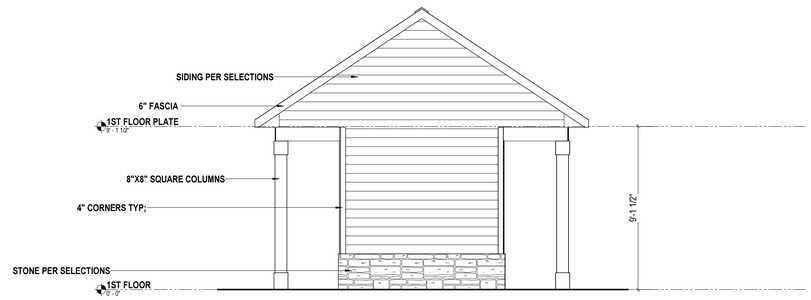

3 REAR VIEW
A-3.00

1/4" = 1'-0" WHEN PRINTED ON 24"x36" / ARCH D PAPER SIZE

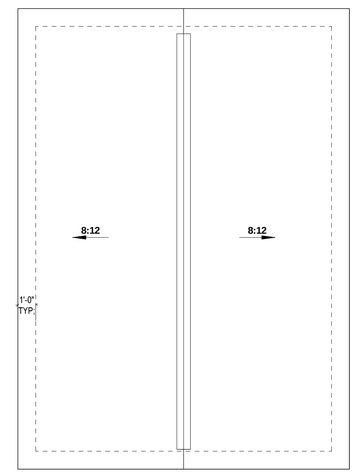

5 ROOF PLAN
A-3.00

1/4" = 1'-0" WHEN PRINTED ON 24"x36" / ARCH D PAPER SIZE

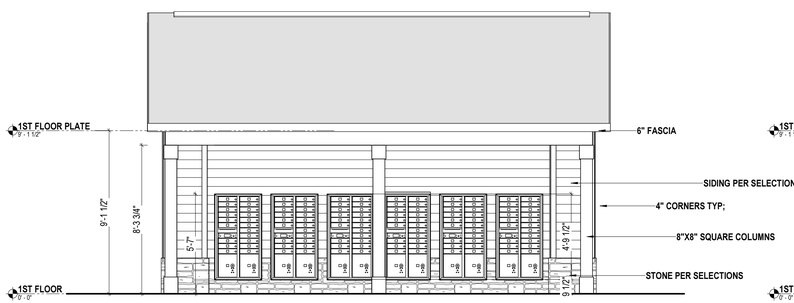

2 LEFT VIEW
A-3.00

1/4" = 1'-0" WHEN PRINTED ON 24"x36" / ARCH D PAPER SIZE

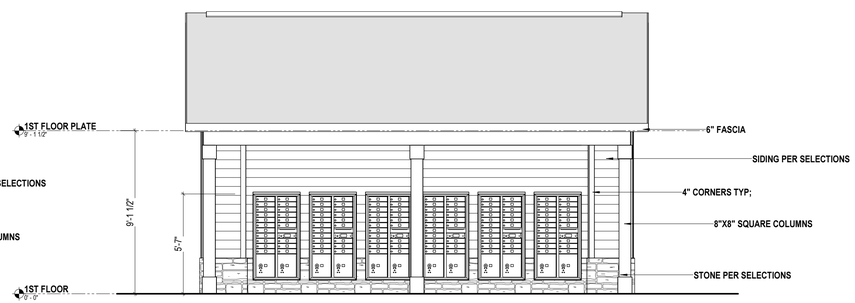

4 RIGHT VIEW
A-3.00

1/4" = 1'-0" WHEN PRINTED ON 24"x36" / ARCH D PAPER SIZE

Longevity Home Solutions
age in place • multigenerational • adaptability

Rick Byers
(804) 217-8367
4932 Dominion Blvd
Suite 106
Glen Allen, VA, 23060

CLIENT
LONGEVITY SOLUTIONS

ADDRESS
DANVILLE

PROJECT
MULTI-FAMILY

SERIES
ACCESSORIES

SHEET
Elevations

ISSUE DATE
1/24/25

DRAWN BY
PINNACLE DESIGN RVA

SHEET NUMBER
A-3.00

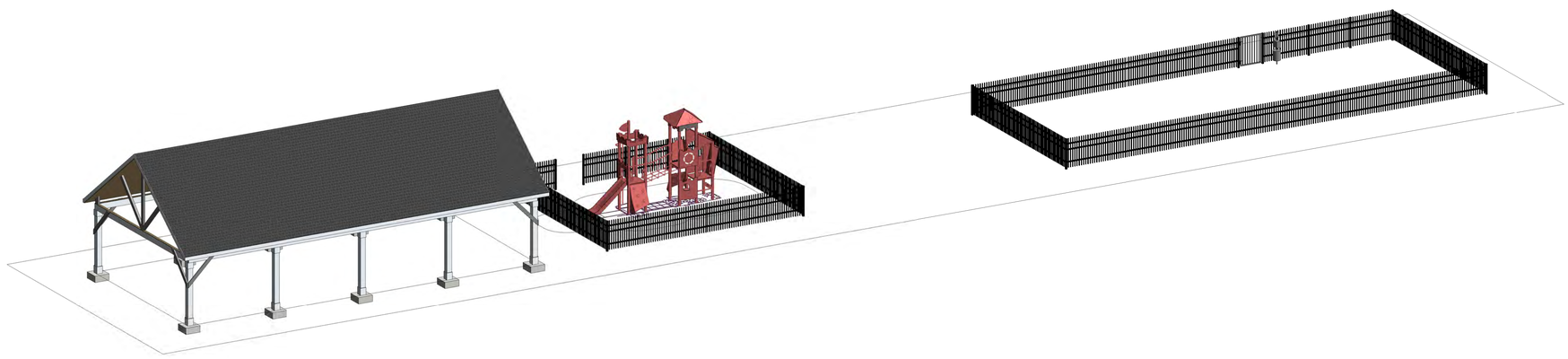

1 A-4.00 **3-D VIEW**

WHEN PRINTED ON 24"x36" / ARCH D PAPER SIZE

Longevity Home Solutions
age in place • multigenerational • adaptability

Rick Byers
(804) 217-8367
4932 Dominion Blvd
Suite 106
Glen Allen, VA, 23060

CLIENT
LONGEVITY SOLUTIONS

ADDRESS
DANVILLE

PROJECT
MULTI-FAMILY

SERIES
ACCESSORIES

SHEET
3-D VIEW

ISSUE DATE
1/24/25

DRAWN BY
PINNACLE DESIGN RVA

SHEET NUMBER
A-4.00

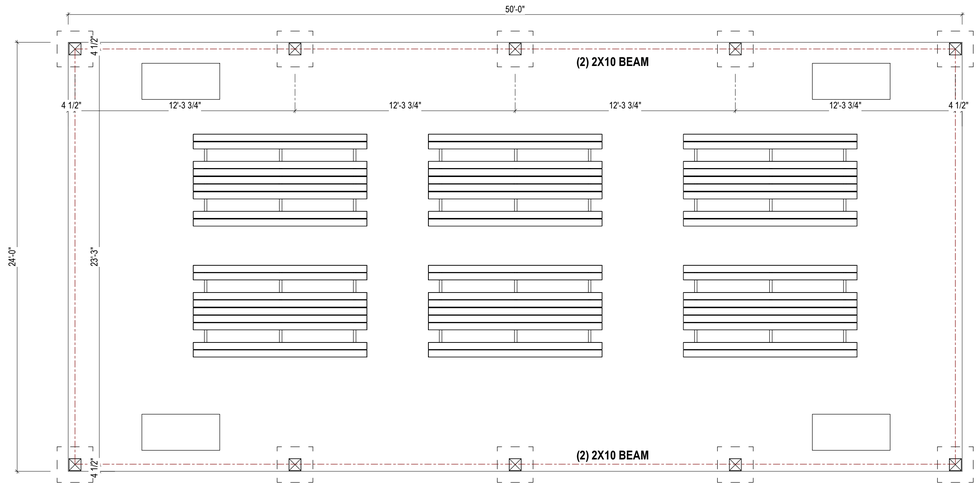

1 FLOOR PLAN

P-1.00 1/4" = 1'-0" WHEN PRINTED ON 24"x36" / ARCH D PAPER SIZE

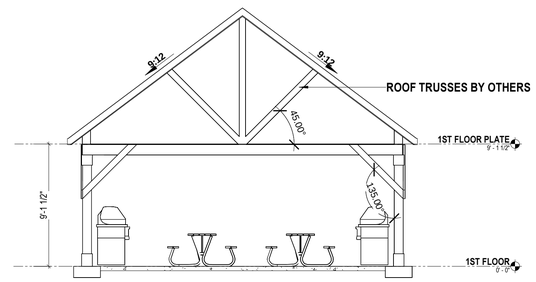

2 FRONT VIEW

P-1.00 3/16" = 1'-0" WHEN PRINTED ON 24"x36" / ARCH D PAPER SIZE

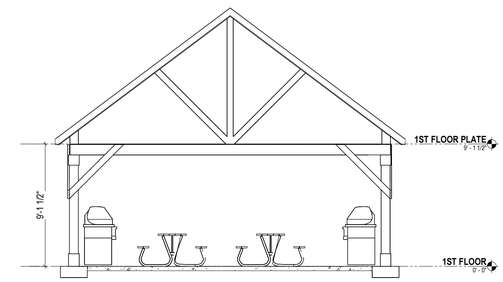

3 REAR VIEW

P-1.00 3/16" = 1'-0" WHEN PRINTED ON 24"x36" / ARCH D PAPER SIZE

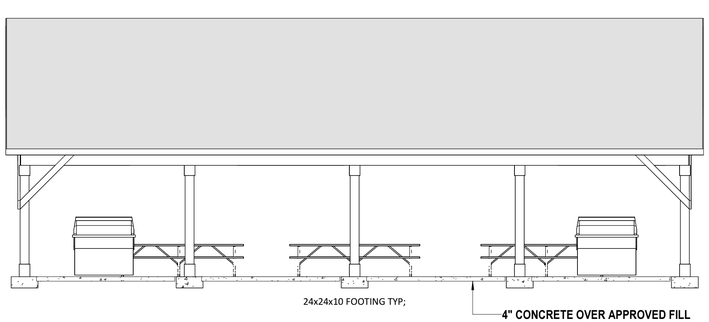

4 LEFT VIEW

P-1.00 3/16" = 1'-0" WHEN PRINTED ON 24"x36" / ARCH D PAPER SIZE

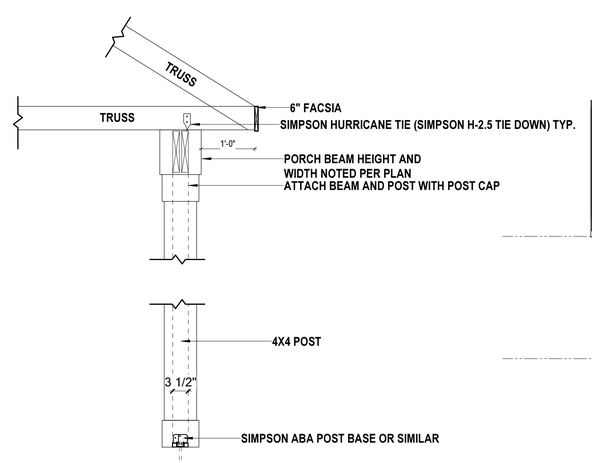

6 PORCH BEAM ROOF DETAIL

P-1.00 3/4" = 1'-0" WHEN PRINTED ON 24"x36" / ARCH D PAPER SIZE

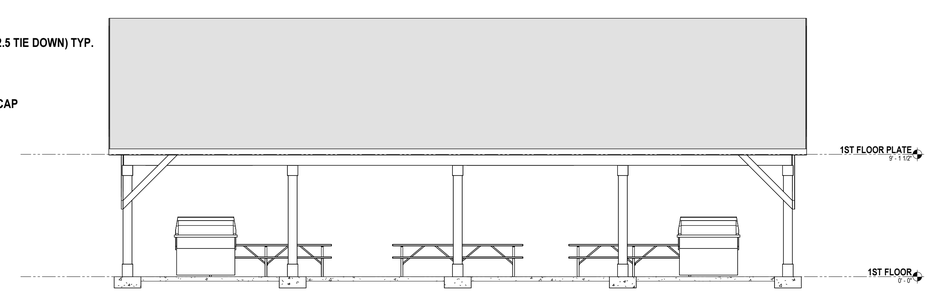

5 RIGHT VIEW

P-1.00 3/16" = 1'-0" WHEN PRINTED ON 24"x36" / ARCH D PAPER SIZE

Longevity Home Solutions
age in place · multigenerational · adaptability

Rick Byers
(804) 217-8367
4932 Dominion Blvd
Suite 106
Glen Allen, VA, 23060

CLIENT
LONGEVITY SOLUTIONS

ADDRESS
DANVILLE

PROJECT
MULTI-FAMILY

SERIES
ACCESSORIES

SHEET
Picnic Pavillion

ISSUE DATE
1/24/25

DRAWN BY
PINNACLE DESIGN RVA

SHEET NUMBER
P-1.00

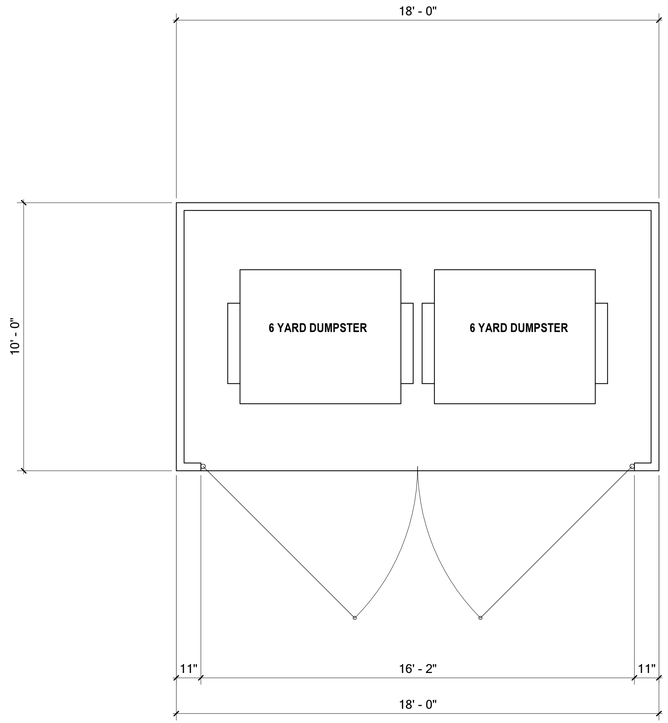

1 DUMPSTER PAD

D-1.00

3/8" = 1'-0" WHEN PRINTED ON 24"x36" / ARCH D PAPER SIZE

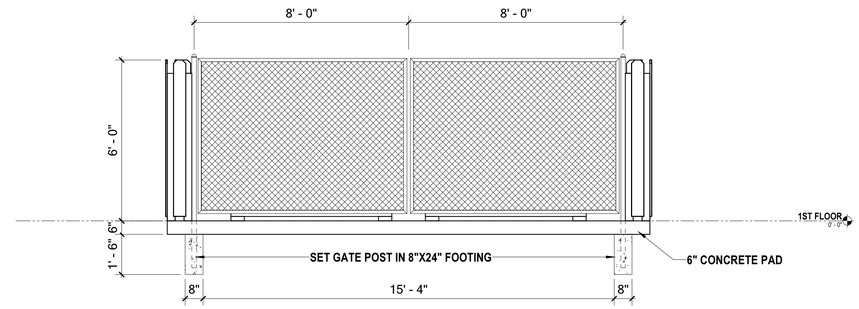

2 FRONT ELEVATION

D-1.00

3/8" = 1'-0" WHEN PRINTED ON 24"x36" / ARCH D PAPER SIZE

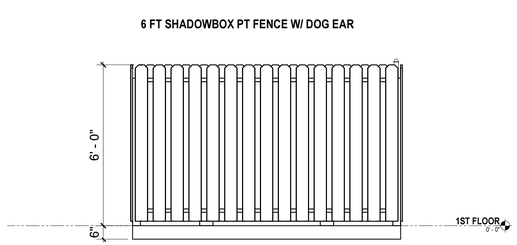

3 LEFT ELEVATION

D-1.00

3/8" = 1'-0" WHEN PRINTED ON 24"x36" / ARCH D PAPER SIZE

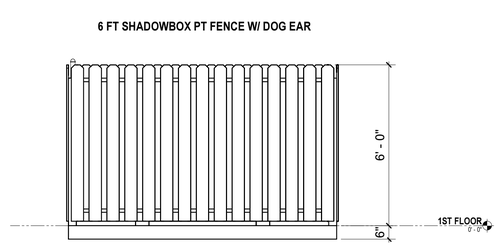

4 RIGHT ELEVATION

D-1.00

3/8" = 1'-0" WHEN PRINTED ON 24"x36" / ARCH D PAPER SIZE

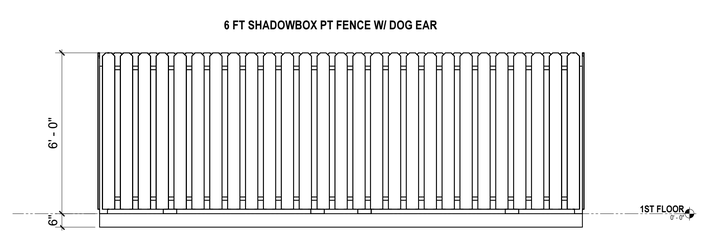

5 REAR ELEVATION

D-1.00

3/8" = 1'-0" WHEN PRINTED ON 24"x36" / ARCH D PAPER SIZE

Longevity Home Solutions
age in place · multigenerational · adaptability

Rick Byers
(804) 217-8367
4932 Dominion Blvd
Suite 106
Glen Allen, VA, 23060

CLIENT
LONGEVITY SOLUTIONS

ADDRESS
DANVILLE

PROJECT
MULTI-FAMILY

SERIES
ACCESSORIES

SHEET
DUMPSTER PAD DETAIL

ISSUE DATE
1/24/25

DRAWN BY
PINNACLE DESIGN RVA

SHEET NUMBER
D-1.00

Pet Waste ELIMINATOR™

www.PetWasteEliminator.com • 1-800-790-8896

LIFE TIME GUARANTEE

Superior Pet Waste Station (Item E3)

The ultimate in quality & convenience with everything you need to get started.

Superior Station Components:

- 1 Rust-proof Aluminum Pet Waste Dispenser Box (10" w x 17"h x 4¾"d)
- 1 10-gallon Steel Trash Receptacle with Attached Lid
- 1 8' Rust-Proof Steel Sign Post
- 1 Aluminum Sign (12" x 18)
- 80 Pet Waste Bags on Header Cards
- 50 Trash Receptacle Liners
- 4 Hardware Kits

Superior Station Options:

- Additional Sign Options
- Available in Green & Black

Assembly:

Easy to install. Minor field assembly required.

Construction:

Heavy-duty aluminum boxes are built to withstand rigorous use and extreme weather. Universal-fit dispenser has exclusive rain guard to keep both bags protected and avoid water accumulation inside the box.

Trash Receptacle with hinged lid is made of industrial grade galvanized steel. The attached lid keeps trash and odors in and rain out.

Both the dispenser box and trash receptacle are powder coated to eliminate rust and last in the elements.

Warranty:

The Superior Pet Waste Station is the ONLY station guaranteed for life and is covered by an Unconditional Lifetime Guarantee— no exceptions!

Why Pet Waste Eliminator?

- Universal fit holds most brands of pet waste bags.
- Large capacity will fit up to 1,2000 header bags, reducing maintenance frequency and costs.
- Sign included to encourage pick-up compliance (several sign options available)
- Same Day Shipping— all units in stock and ship today
- **LOWEST PRICE GUARANTEED** - See how we compare— we'll BEAT any comparable competitor price by 10%!

CAD Drawings and assembly instructions available upon request.

Tot Lot

350-2221A

Equipment Manufacturer

PLAYWORLD
The world needs play.

Tot Lot

350-2221A

Equipment Manufacturer

PLAYWORLD
The world needs play.

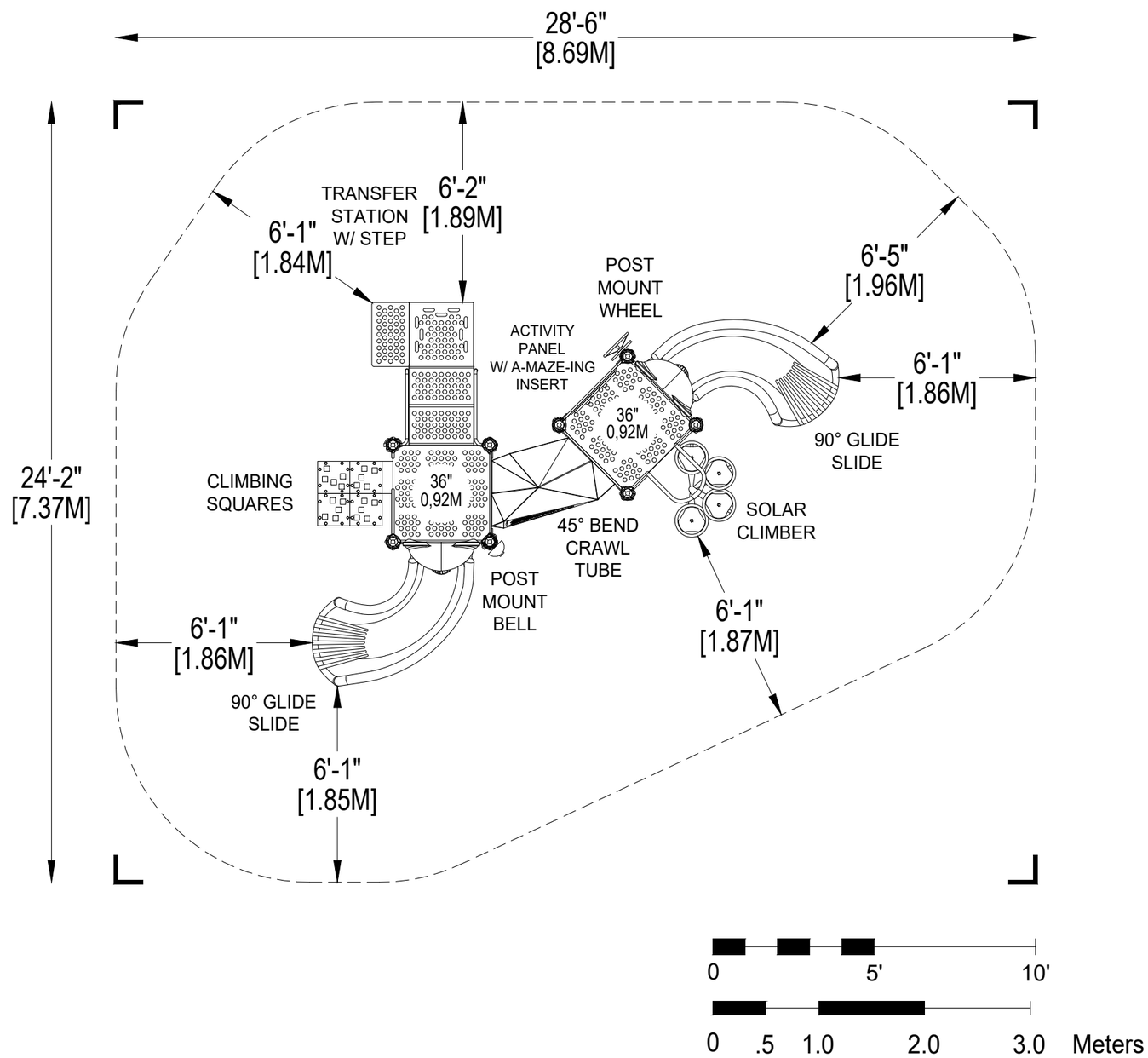

*PLAYGROUND SUPERVISION REQUIRED

PLAYWORLD

PLAYWORLD SYSTEMS, INC.
1000 Buffalo Road
Lewisburg, PA
17837-9795 USA

EQUIPMENT SIZE:
16'4" x 11'11" x 8'5"
4,98M x 3,63M x 2,57M

USE ZONE:
28'6" x 24'2"
8,69M x 7,37M

AREA:	PERIMETER:
560 SqFt.	**87'5"**
52,02 SqM.	26,65M

FALL HEIGHT:
3 Ft.
0,92M

USER CAPACITY:	AGE GROUP:
23	**2-5**

ADA SCHEDULE

	Total Elevated Play Activities: 6		
	Total Ground-Level Play Activities: 2		
	Accessible Elevated Activities	Accessible Ground-Level Activities	Accessible Ground-Level Play Types
Required	3	2	2
Provided	6	2	2

✓ ASTM F1487-21
✓ CPSC #325

PROJECT NO:	SCALE:
350-2221	**1/4"=1'-0"**
DRAWN BY: **M. MERTZ**	Paper Size **B**
DATE: **22-SEPT-23**	

TOT LOT

CATALOG PRE-DESIGN

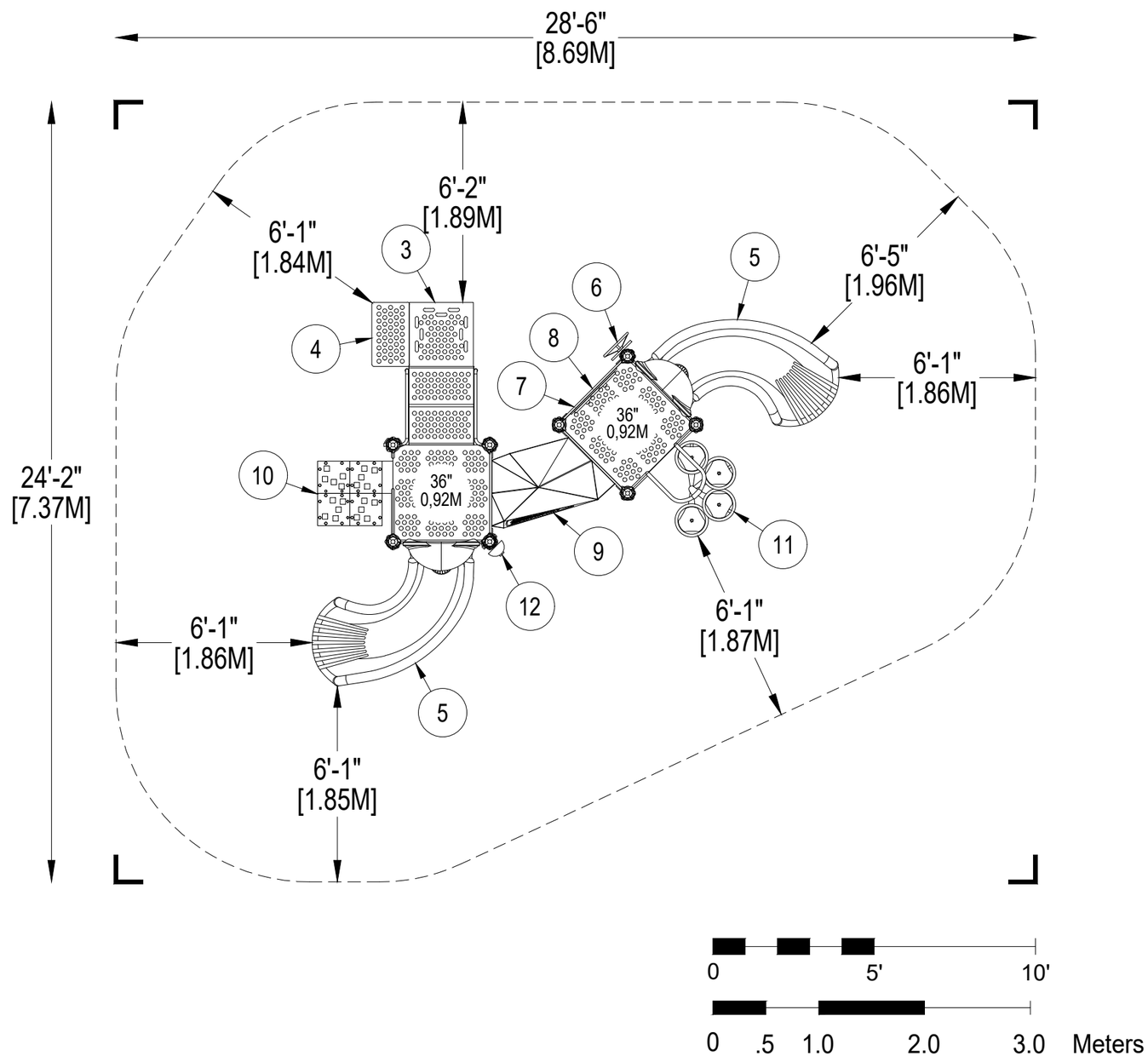

*PLAYGROUND SUPERVISION REQUIRED

PLAYWORLD

PLAYWORLD SYSTEMS, INC.
1000 Buffalo Road
Lewisburg, PA
17837-9795 USA

EQUIPMENT SIZE:
16'4" x 11'11" x 8'5"
4,98M x 3,63M x 2,57M

USE ZONE:
28'6" x 24'2"
8,69M x 7,37M

AREA:	PERIMETER:
560 SqFt.	**87'5"**
52,02 SqM.	26,65M

FALL HEIGHT:
3 Ft.
0,92M

USER CAPACITY:	AGE GROUP:
23	**2-5**

ADA SCHEDULE	Total Elevated Play Activities: 6		
	Total Ground-Level Play Activities: 2		
	Accessible Elevated Activities	Accessible Ground-Level Activities	Accessible Ground-Level Play Types
Required	3	2	2
Provided	6	2	2

✓ ASTM F1487-21
✓ CPSC #325

PROJECT NO:	SCALE:
350-2221	**1/4"=1'-0"**
DRAWN BY: **M. MERTZ**	Paper Size **B**
DATE: **22-SEPT-23**	

TOT LOT
CATALOG PRE-DESIGN

DETAIL 1

Support Post, Spiral Slide and Post Footing Detail

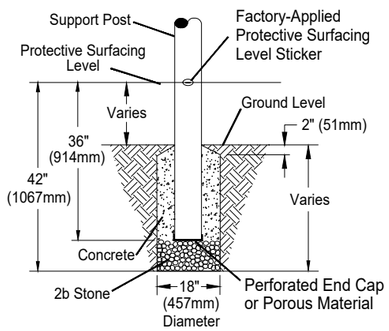

STONE OPTION

OR

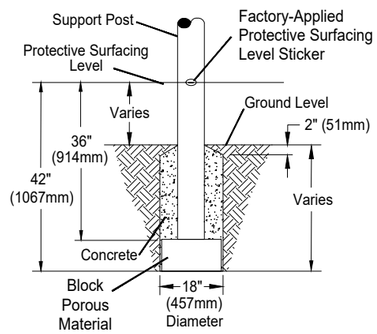

BLOCK OPTION

When utilizing Post Extensions adjust depth of footing/concrete accordingly.

DETAIL 2

GroundZerO, Cantilever and "T" Post Footing Detail

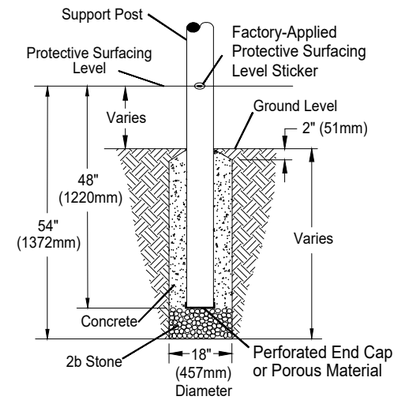

STONE OPTION

OR

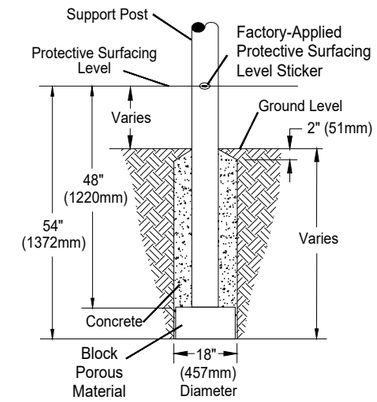

BLOCK OPTION

DETAIL 3

Component Footing Detail

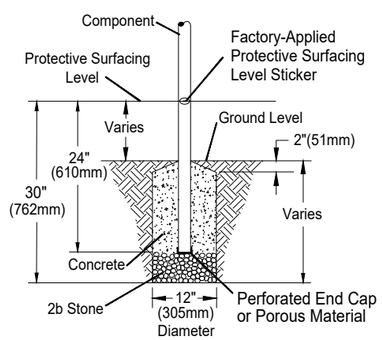

STONE OPTION

OR

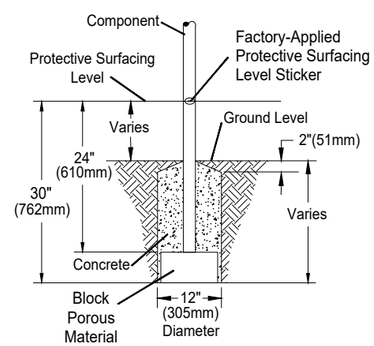

BLOCK OPTION

DETAIL 4

Surface Mount Detail

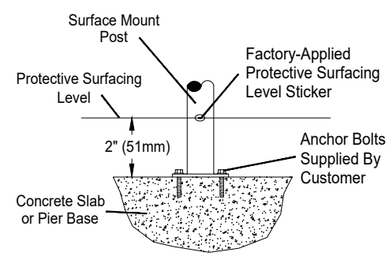

DETAIL 5

Shade Post Footing Detail

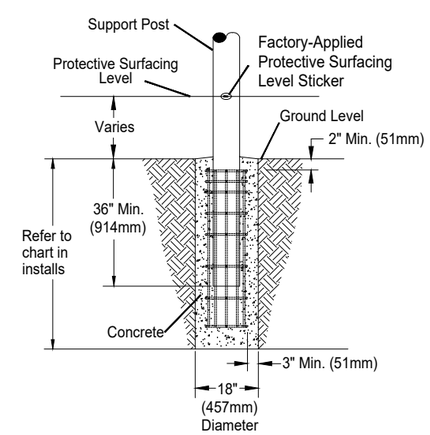

SITE NOTES:

1) The site plan provided must be checked against the actual site area to ensure that placement of your structure meets required clearances.
2) The dimensions labeled are for location of footing holes, not exact placement of equipment. Assemble, plumb, and level equipment before pouring concrete.
3) There must be a minimum distance of 6' (1830mm) between any obstacle, sidewalk, etc., and your structure.
4) Slides must have a use zone that extends out from the lower exit section of the slide a distance that is at least 6' (1830mm) or equal to the vertical distance from the highest point of the sliding surface to the top of the protective surfacing, whichever is greater. The slide use zone should not extend greater than 8' (2438mm) from the end of the lower exit section.
5) The complete area, including the space under and around the equipment, must be covered with an impact attenuating material. See the 1997 publication, "Handbook for Public Playground Safety", published by the U.S. Consumer Product Safety Commission, for guidelines and recommendations on the type and depth of surfacing material. For a copy of the "Handbook for Public Playground Safety", write to: **U.S. Consumer Product Safety Commission**
Office of Information and Public Affairs
Washington, D.C. 20207

INSTALLATION NOTES:

1) Paved surfaces, such as asphalt and concrete, are not acceptable for use under your structure.
2) It is the consumer's responsibility to check with local utilities prior to excavating footings for any underground utility lines that may exist within the installation area.
3) It is the consumer's responsibility to check local soil conditions and drainage within the site area. Inquire with local contractors for appropriate recommendations.
4) If the structure is to be installed across uneven terrain, maintain the support post mark for protective surfacing level at the lowest grade. Adjust other footings accordingly.
5) The base of footings must be below frost lines.
6) Do not encase the bottom of support posts in concrete. Place all posts directly on packed stone.
7) Assemble the entire structure before pouring concrete unless specifically instructed to do so in the individual component installation instructions.
8) Read completely the installation instructions provided with your structure prior to beginning construction.

***PLAYGROUND SUPERVISION REQUIRED**

PLAYWORLD

PLAYWORLD SYSTEMS, INC.
1000 Buffalo Road
Lewisburg, PA
17837-9795 USA

FOOTING LEGEND

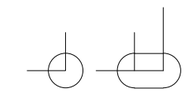

COMPONENT FOOTING (DETAIL 3)

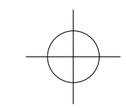

SPIRAL SLIDE CENTER POST FOOTING (DETAIL1)

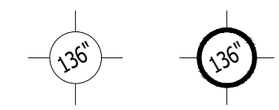

SUPPORT POST FOOTING (DETAIL 1 or 4)
(136" INDICATES POST LENGTH)
THICK BORDER INDICATES POST EXTENSION LOCATION

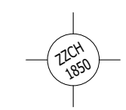

CANTILEVER, "T" POST, AND COMPONENT POST FOOTING (DETAIL 2)
(ZZCH1850 INDICATES PART NUMBER)

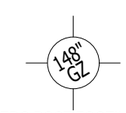

GROUND ZERO POST FOOTING (DETAIL 2)
(148" INDICATES POST LENGTH)

SHADE HAT POST FOOTING (DETAIL 5)
(210" INDICATES POST LENGTH)

FOOTING DETAIL	SCALE: NOT TO SCALE
DRAWN BY: PW CAD	Paper Size B
DATE: 18-NOV-20	

POST FOOTING DETAILS

PLAYMAKERS / CHALLENGERS

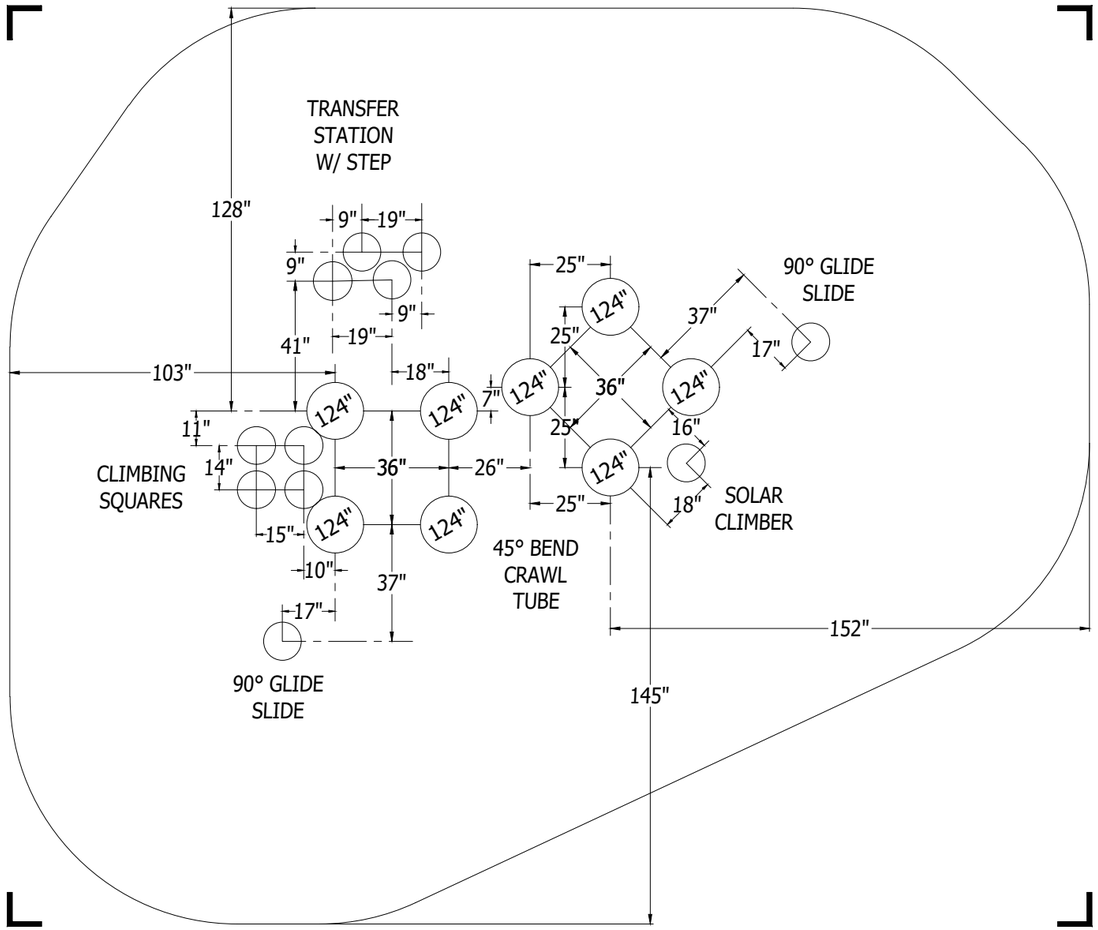

*PLAYGROUND SUPERVISION REQUIRED

PLAYWORLD

PLAYWORLD SYSTEMS, INC.
1000 Buffalo Road
Lewisburg, PA
17837-9795 USA

FOOTING LEGEND

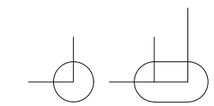

COMPONENT FOOTING (DETAIL 3)

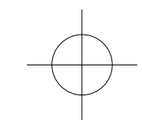

SPIRAL SLIDE CENTER POST FOOTING (DETAIL1)

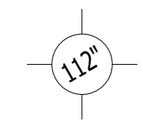

SUPPORT POST FOOTING (DETAIL 1 or 4)
(112" INDICATES POST LENGTH)

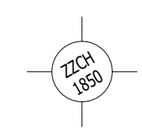

CANTILEVER, "T" POST, AND COMPONENT
POST FOOTING (DETAIL 2)
(ZZCH1850 INDICATES PART NUMBER)

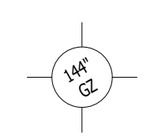

GROUND ZERO POST FOOTING (DETAIL 2)
(144" INDICATES POST LENGTH)

PROJECT NO:	SCALE:
350-2221	**1/4"=1'-0"**
DRAWN BY: **M. MERTZ**	Paper Size **B**
DATE: **22-SEPT-23**	

TOT LOT

CATALOG PRE-DESIGN

2025 AERIAL IMAGERY OF SUBJECT PROPERTY

Prepared by:
Planning Division
3/11/2025

N

DANVILLE VIRGINIA

Disclaimer: Information contained on this map is to be used for reference purposes only. The City of Danville is not responsible for any inaccuracies herein contained. The City of Danville makes no representation of warranty as to this map's accuracy, and in particular, its accuracy in labeling, dimensions, contours, property boundaries, or placement or location of any map features thereon. No responsibility is assumed for damages or other liabilities due to the accuracy, availability, use or misuse of the information herein provided.

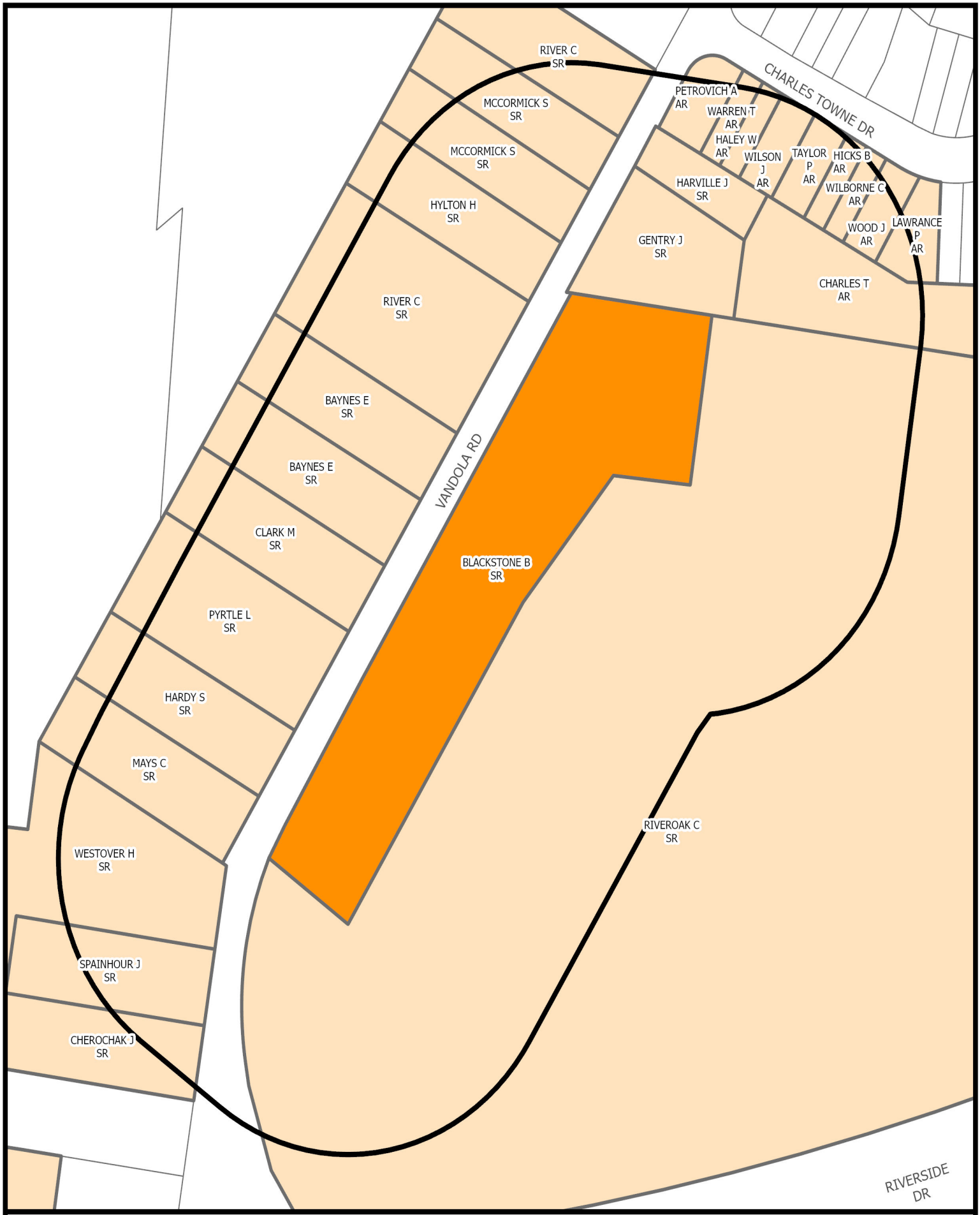

SURROUNDING PROPERTY OWNERS AND ZONING WITHIN 300 FEET OF SUBJECT PROPERTY

Prepared by:
Planning Division
3/10/2025

N

DANVILLE VIRGINIA

Disclaimer: Information contained on this map is to be used for reference purposes only. The City of Danville is not responsible for any inaccuracies herein contained. The City of Danville makes no representation of warranty as to this map's accuracy, and in particular, its accuracy in labeling, dimensions, contours, property boundaries, or placement or location of any map features thereon. No responsibility is assumed for damages or other liabilities due to the accuracy, availability, use or misuse of the information herein provided.

CITY OF DANVILLE
Community Development
Division of Planning and Zoning

MEMORANDUM

DATE: APRIL 7, 2025
TO: CITY COUNCIL
FROM: CITY PLANNING COMMISSION
RE: REZONING APPLICATION PZ25-00194

Rezoning application PZ25-00194 filed by Blackstone Building Group LLC to rezone Parcel 78585 (Vandola Road) from S-R Suburban Residential to A-R Attached Residential.

RECOMMENDATION

The Planning Commission, at their April 7, 2025, meeting voted 6-0 to recommend approval of Rezoning application PZ25-00194 with the following conditions:

1. The developer will complete a Traffic Impact Analysis in consultation with the City of Danville and implement the recommendations (TIA was completed 09-21-24);
2. A minimum of 35% of the building exteriors will be masonry;
3. The height of each building may not exceed three (3) stories or 45 feet; and
4. Parking shall not be placed in the front yard (Vandola Road) of the development.

Steve Petrick RB

Mr. Steve Petrick, Chair

Council Letter
City of Danville, Virginia

CL - 1996 **NEW BUSINESS D.**

City Council REGULAR MEETING

Meeting Date: May 6, 2025

Subject: Consideration of Adjusting Utility Rates for Utility Services

From: Jason Grey, Director of Utilities

COUNCIL ACTION

1. Public Hearing

2. An Ordinance Adjusting Utility Rates for Utility Services Effective July 1, 2025.

SUMMARY

The 2025 Biennial Rate Study was recommended by the Danville Utility Commission at their January meeting. Utility Financial Solutions, a qualified utility rate consultant, completed the recommended rate study, slated to go into effect on July 1, 2025, if approved by City Council. The proposed rate adjustments in wastewater, water, natural gas, and electric rates are necessary due to inflationary increases in materials and labor costs. Residential water and wastewater customers that consume approximately 4,000 gallons per month will see a $3.50/month combined increase. Electric customers who use 1,000 kilowatt-hours per month will see a $4.50/month increase. However, an electric customer who uses 700 kilowatt-hours per month will see an increase of $3.60/month. The average residential natural gas customer is expected to see an increase of approximately $2.96/month.

The supporting documentation details the proposed utility rate adjustments in all utility funds. The benefit of completing this study and rate adjustment is to align utility rates based on the cost of providing service to each customer class. It also allows for small incremental increases to be made to align our rates with market costs and to avoid larger double-digit rate increases.

BACKGROUND

The 2025 biennial rate study was completed by Utility Financial Solutions and presented to the Utility Commission at the December 2024 meeting. The study describes financial targets, revenue requirements, and proposed changes for the next two fiscal years for each customer class. Substantial improvements continue to be made to the utility infrastructure, and operational improvements are ongoing. These combined efforts reflect our commitment to provide safe, reliable utility services at the lowest rates currently possible.

Chapter 2, Article I of the Danville City Code delegates to the Utility Commission responsibility for determining and establishing such policies as, non-consumption utility fees, utility extensions, service fee connections, and other general service policies not designated to City Council.

RECOMMENDATION

Staff recommends City Council adopt the accompanying Ordinance authorizing modifications to utility

services for Fiscal Years 2026 and 2027. The Danville Utility Commission supported these modifications during their budget review.

Attachments

1. Ordinance

PRESENTED:_____

ADOPTED: _____

ORDINANCE NO. 2025-_____.____

AN ORDINANCE ADJUSTING UTILITY RATES FOR UTILITY SERVICES EFFECTIVE JULY 1, 2025.

WHEREAS, the City of Danville has established a Utility Commission to set policies and recommend utility rates for adoption by the City Council; and

WHEREAS, the Danville Utility Commission has overseen a comprehensive utility rate study that afforded public information and involvement opportunities, and the Commission has recommended that certain utility rate adjustments be put into effect in Fiscal Year 2026 and Fiscal Year 2027.

NOW THEREFORE, BE IT ORDAINED, by the Council of the City of Danville, Virginia, that effective July 1, 2025 the rates and charges for the City of Danville's utility services be established, authorized, and approved as contained in the Appendix A, B, and C attached hereto and made part hereof as it fully set forth within this Ordinance.

Approved:

_____
Mayor

Attest:

_____
City Clerk

Approved as to
Form and Legal Sufficiency:

_____
City Attorney

APPENDIX A - WATER AND WASTEWATER ACCOUNTS

Existing and Rates Effective July 1, 2025

	Current Rate	Proposed Rate
Water		
Water Consumption Rate (per 100 Cubic Feet)	**$2.55**	**$2.65**
Customer Charge		
5/8”	$10.50	$11.50
1”	$26.00	$28.50
1.5”	$54.00	$59.50
2”	$85.00	$93.50
3”	$160.00	$176.00
4”	$256.00	$281.50
6”	$507.00	$558.00
8”	$810.00	$891.00
Wastewater		
Water Consumption Rate (per 100 Cubic Feet)	**$2.38**	**$2.50**
Customer Charge		
5/8”	$14.00	$15.50
1”	$34.75	$38.75
1.5”	$70.50	$78.25
2”	$113.00	$125.50
3”	$229.00	$254.25
4”	$362.00	$402.00
6”	$720.00	$800.00
8”	$1160.00	$1288.00

APPENDIX B – NATURAL GAS ACCOUNTS

Existing and Rates Effective July 1, 2025

Electric – Customer Charge	Current Rate	Proposed Rate
Residential Customer Charge	$12.15	$14.15
Residential Distribution Charge (per therm)	$0.2681	$0.2895
Firm Commercial Customer Charge	$24.30	$34.30
Firm Commercial Distribution Charge (per therm)		
First 5,000 therms	$0.2585	$0.2655
Over 5,000 therms	$0.2310	$0.2373
Firm Industrial Customer Charge	$125.00	$175.00
Firm Industrial Distribution Charge (per therm)		
0 to 5,000 therms	$0.2295	$0.2580
5,001 to 100,000 therms	$0.2014	$0.2264
100,000+ therms	$0.1124	$0.1264
Interruptible Industrial Customer Charge	$550.00	$650.00
Interruptible Industrial Distribution Charge (per therm)	$0.1032	$0.1323
Industrial Hedging Customer Charge	$475.00	$575.00
Industrial Hedging Distribution Charge (per therm)		
0 to 5,000 therms	$0.1500	$0.1950
5,001 to 100,000 therms	$0.0750	$0.0970
Firm Industrial Transportation Customer Charge	$375.00	$475.00
Firm Industrial Distribution Charge (per therm)	$0.1450	$0.1518

APPENDIX C - ELECTRIC ACCOUNTS

Existing and Rates Effective July 1, 2025

Electric – Customer	Current	Proposed
Residential (RS)	$12.50	$14.00
Residential (RSTOU)	$15.80	$15.80
Small General Service (SGS)	$19.00	$22.50
Small General Service (SGSTOU)	$23.50	$27.00
Worship Sanctuary (WSS-15)	$52.00	$52.00
Medium General Service (MGS-1)	$125.00	$150.00
Medium General Service (MGS-1 TOU)	$136.00	$161.00
Medium General Service (MGS-)	$75.00	$75.00
Medium General Service (MGS-3)	$150.00	$150.00
Large General Service (LGS-1)	$500.00	$700.00
Large General Service (LGS-2)	$500.00	$650.00
Large General Service (LGS-3)	$450.00	$600.00
High Load Factor Industrial Rate (HLF)	$800.00	$800.00

Electric Customer	Energy Current Price Per kWh	Energy Proposed Price Per kWh	Demand Current Price Per kW	Demand Proposed Price Per kW
Residential (RS)	$0.1190	$0.1220	-	-
Small General (SGS)	$0.1190	$0.1230	-	-
Small General Service (SGS-1 TOU) – Summer On-Peak	$0.1730	$0.1790	-	-
Small General Service (SGS-1 TOU) – Summer Off-Peak	$0.1020	$0.1060	-	-
Small General Service (SGS-1 TOU) – Winter On-Peak	$0.1530	$0.1580	-	-
Small General Service (SGS-1 TOU) – Winter Off-Peak	$0.1040	$0.1080	-	-
Worship Sanctuary (WGS-15)	$0.01088	$0.1140	$3.00	$3.50
Medium General (MGS-1)	$0.0665	$0.0710	$14.50	$14.50
Medium General Service (MGS-1 TOU) – Summer On-Peak	$0.136	$0.1460	$11.27	$11.27
Medium General Service (MGS-1 TOU) – Summer Off-Peak	$0.065	$0.070	$11.27	$11.27
Medium General Service (MGS-1 TOU) – Winter On-Peak	$0.116	$0.1240	$11.27	$11.27
Medium General Service (MGS-1 TOU) – Winter Off-Peak	$0.067	$0.072	$11.27	$11.27
Medium General (MGS-2)	$0.0589	$0.0640	$13.14	$13.14
Medium General (MGS-3)	$0.0687	$0.0720	$14.50	$14.50
Large General (LGS-1)	$0.0600	$0.0630	$17.50	$17.50
Large General (LGS-2)	$0.0583	$0.0610	$17.25	$17.25
Large General (LGS-3)	$0.0600	$0.0630	$17.50	$17.50
High Load Factor – HLF	Market	Market	$6.50	$6.50

Council Letter
City of Danville, Virginia

CL - 1975 **NEW BUSINESS E.**

City Council REGULAR MEETING

Meeting Date: May 6, 2025

Subject: Fiscal Year 2026 Danville Public Schools Budget.

From: Henrietta Weaver, Budget Director

COUNCIL ACTION

1. Public Hearing

2. A Resolution Approving the Budget of the School Board of the City of Danville for the Fiscal Year Ending June 30, 2026.
   First Reading

SUMMARY

The Public Hearing for the Fiscal Year 2026 School Board Budget is scheduled for May 6, 2025. The City's Budget for Support of Schools includes $32,483,680 for Support of Operations, and $1,874,100 for Debt Service, for a grand total of $34,357,780.

RECOMMENDATION

It is recommended that City Council approve the attached Resolution approving the Fiscal Year 2026 Danville Public Schools Budget.

Attachments

1. Resolution

PRESENTED: _____

ADOPTED: _____

RESOLUTION NO. 2025- ___-___

A RESOLUTION APPROVING THE BUDGET OF THE SCHOOL BOARD OF THE CITY OF DANVILLE FOR THE FISCAL YEAR ENDING JUNE 30, 2026.

WHEREAS, the School Board of the City of Danville presented to the Council its estimate of the amount of money needed for the support of the public schools of the City during Fiscal Year 2026 which estimate reflected total proposed expenditures in the amount of $105,282,184; and

WHEREAS, the City shall contribute $32,483,680 for School Operations and $1,874,100 for School Debt Service for a total appropriation of $34,357,780; and

WHEREAS, the City Council does not intend by this resolution to guarantee to the School Board of the City of Danville any contribution for support of schools in future fiscal years above that amount required by Virginia law for support of schools; and

WHEREAS, a brief synopsis of the proposed Budget of the School Board for Fiscal Year 2026 was duly published, and, after public notice duly given, a public hearing with respect thereto has been conducted by the Council, after due public notice thereof, and upon consideration of which it is now necessary and desirable to approve the same as prescribed by law.

NOW THEREFORE, BE IT RESOLVED, by the Council of the City of Danville, Virginia that, pursuant to Section 22.1-93 of the Code of Virginia, 1950, as amended, the budget of the School Board of the City of Danville for the Fiscal Year ending June 30, 2026 be, and the same is hereby, approved for educational purposes subject the above recited conditions.

Approved:

_____
Mayor

Attest:

_____
City Clerk

Approved as to
Form and Legal Sufficiency:

_____
City Attorney

Council Letter
City of Danville, Virginia

CL - 1974 **NEW BUSINESS F.**

City Council REGULAR MEETING

Meeting Date: May 6, 2025

Subject: Consideration of Fee Changes Effective July 1, 2025.

From: Henrietta Weaver, Budget Director

COUNCIL ACTION

1. Public Hearing

2. An Ordinance Amending and Establishing and Increasing Certain Fees of the City of Danville Effective July 1, 2025.
   First Reading

SUMMARY

The Fiscal Year 2026 City Council Introductory Budget contains recommendations for the following new fees or fee increases:

The establishment of a large event street closure permit fee in Public Works which is estimated to provide an additional $5,000 in revenue; and Sanitation fee increases which are estimated to provide an additional $210,120 in revenue.

BACKGROUND

The purpose of the "Large Event Fee" establishment in Public Works is to capture revenue from the customers who are using this service and to reduce the subsidy that the general taxpayer provides to make these available. The proposed fee was compared to peer cities to make sure it is competitive with what others charge for these services. The proposed fee is $75.

Sanitation fees are being increased due to the rising cost of providing this service. The Sanitation Fund is a self-supporting operation and, unfortunately, the rising costs associated with personnel and equipment require this increase. This is the third and final year of a multi-year plan to increase fees by $1 per month for typical residential customers. Prior to the implementation of the multi-year plan, sanitation fees had not been changed since 2005. The sanitation fund pays for the cost of residential trash collection, recycling drop-off centers, yard waste collection, leaf collection, and code enforcement activities.

RECOMMENDATION

It is recommended that City Council adopt the attached ordinance establishing and increasing fees.

Attachments

PRESENTED: _____

ADOPTED: _____

ORDINANCE NO. 2025-____. _____

AN ORDINANCE AMENDING AND ESTABLISHING AND INCREASING CERTAIN FEES OF THE CITY OF DANVILLE EFFECTIVE JULY 1, 2025.

WHEREAS, the City of Danville charges fees for services rendered and permits; and

WHEREAS, fees for services rendered and permits are designed to help recoup a portion of the costs of providing those services; and

NOW THEREFORE, BE IT ORDAINED, by the Council of the City of Danville, Virginia, that certain fees, be, and the same are hereby, established and approved in accordance with the two schedules, which are hereto and made a part hereof, as if fully set forth within, as follows:

Schedule I. Large Event Street Closure Permit Fees

Schedule II. Sanitation Fees

AND BE IT FURTHER ORDAINED that this Ordinance shall be and become effective on and as of July 1, 2025, except where otherwise stated.

Approved:

_____
Mayor

Attest:

_____
City Clerk

Approved as to
Form and Legal Sufficiency:

_____
City Attorney

Schedule I

CITY OF DANVILLE
PUBLIC WORKS DEPARTMENT
EFFECTIVE JULY 1, 2025

Pursuant to Danville City Code § 2-9, § 24-21 through § 24-23, and Danville City Charter § 2-19.

FEE	CURRENT	PROPOSED
Large event street closure permit fee	$ 0	Actual cost
Large event street closure permit fee – base application fee	$0	$75

Schedule II

CITY OF DANVILLE
PUBLIC WORKS DEPARTMENT
SANITATION FEES
EFFECTIVE JULY 1, 2025

Pursuant to Danville City Code § 2-9, § 17-25, § 17-26 and § 17-51, and Danville City Charter § 2-19.

FEE	CURRENT	PROPOSED
Residential Refuse Collection	$18.50	$19.50
Residential Refuse Collection – reduced fee	$9.25	$9.75

Council Letter
City of Danville, Virginia

CL - 2036 **NEW BUSINESS G.**

City Council REGULAR MEETING

Meeting Date: May 6, 2025

Subject: Consideration of the Issuance of Danville IDA Lease Revenue Bonds.

From: Michael Adkins, Chief Financial Officer

COUNCIL ACTION

A Resolution Approving and Authorizing a Plan to Finance Certain Economic Development Projects Through the Issuance of a Lease Revenue Bond by the Industrial Development Authority of Danville, Virginia.

SUMMARY

The Industrial Development Authority of the City of Danville, Virginia (IDA) has secured financing from Huntington Bank through the Master Lease Program for up to $2,600,000 to purchase various parcels of real estate located within the City of Danville, Virginia. This financing through the Master Lease Program will be an issuance of federally taxable revenue bonds supported by an annual appropriation of lease payments from the City to the IDA. The bonds will mature no later than December 31, 2035 and carry an interest rate not to exceed 5.61%. Huntington bank will allow prepayment in whole or in part at any time with no penalty.

BACKGROUND

The IDA secured funding through Huntington Bank, Columbus, Ohio, to acquire various parcels of real estate located within the City of Danville, Virginia with an issuance of revenue bonds under the Master Lease Program between the City and IDA. Specifically, proceeds from the revenue bonds will be used to purchase the following parcels of real estate: Parcel 20204 (Patton Street), Parcel 22131 (Patton Street), Parcel 20219 (118-132 South Union Street), Parcel 21768 (508 Memorial Drive), and Parcel 20218/20215 (530 Patton Street).

RECOMMENDATION

Staff recommends approval of the Resolution to approve this plan of financing through the issuance of a lease revenue bond by The Industrial Development Authority of the City of Danville, Virginia.

Attachments

1. Resolution

PRESENTED:_____

ADOPTED:_____

RESOLUTION NO. 2025 -_____._____

A RESOLTUION APPROVING AND AUTHORIZING A PLAN TO FINANCE CERTAIN ECONOMIC DEVELOPMENT PROJECTS THROUGH THE ISSUANCE OF A LEASE REVENUE BOND BY THE INDUSTRIAL DEVELOPMENT AUTHORITY OF DANVILLE, VIRGINIA.

WHEREAS, the City of Danville, Virginia (the "City"), has created the Industrial Development Authority of Danville, Virginia, a political subdivision of the Commonwealth of Virginia (the "Authority"), pursuant to the provisions of the Industrial Development and Revenue Bond Act (the "Act"), Chapter 49, Title 15.2, Code of Virginia of 1950, as amended (the "Virginia Code"), and has empowered the Authority with all of the public and corporate powers set forth in the Act, including, among other things, the power to make loans to, among others, the City in furtherance of the Act; to finance or refinance and lease facilities for use by, among others, the City; to enter into financing arrangements by which the Authority may accept contributions, grants and other financial assistance from any political subdivision of the Commonwealth of Virginia, including the City; to purchase real property in furtherance of the purposes of promoting economic development; to issue revenue bonds, notes and other obligations from time to time for such purposes and to pledge all or any part of its revenues and receipts derived from payments received by the Authority in connection with its loans, leasing or other financial arrangements or from any source as security for the payment of principal of and premium, if any, and interest on any such obligations; and

WHEREAS, at the request of the City, the Authority has proposed to acquire the following parcels located within the City: Parcel Number 20204 (Patton Street); Parcel Number 22131 (Patton Street); Parcel Number 20219 (118-132 South Union Street); Parcel Number 21768 (508 Memorial Drive); and Parcel Numbers 20218 and 20215 (530 Patton

Street) (collectively, the "Parcels"); all for the purposes of increasing or enhancing the commercial economic base, providing additional public parking and providing parks and recreational facilities (collectively, the "Series 2025 Project"); and

WHEREAS, the Authority has proposed to issue a revenue bond (as hereinafter described, the "Series 2025 Bond") and use the proceeds thereof to finance costs of the Series 2025 Project and pay related costs of issuance; and

WHEREAS, the Authority has proposed to issue the Series 2025 Bond as an additional bond under an existing financing structure with the City that is secured by certain rental payments appropriated from time to time by the Council of the City (the "Council") and payable to the Authority in accordance with the terms of the Financing Lease (as hereinafter defined); and

WHEREAS, the City's financial advisor, Davenport & Company LLC (the "Financial Advisor"), has solicited bids, on behalf of the City and the Authority, from financial institutions for a loan to the Authority, to be evidenced by the Series 2025 Bond; and

WHEREAS, the Financial Advisor, together with the City and the Authority, has reviewed the bids and recommends that the City and the Authority accept the bid of Huntington National Bank (the "Lender") as the proposal most advantageous to the City and the Authority; and

WHEREAS, there have been made available at this meeting drafts of the following documents (collectively, the "Documents"), proposed in connection with the issuance and sale of the Series 2025 Bond:

(a) a Third Supplemental Agreement of Trust, supplementing an Agreement of Trust dated as of March 1, 2017, as previously supplemented (collectively, the "Trust Agreement"), all between the Authority and U.S. Bank Trust Company, National Association (the "Trustee"), pursuant to which the Authority may issue Bonds (as defined therein) from time to time, including the Series 2025 Bond, and which is to be acknowledged and consented to by the City; and

(b) a Second Supplemental Deed and Agreement of Financing Lease (the "Supplemental Financing Lease"), supplementing a Deed and Agreement of

Financing Lease dated as of March 1, 2017, as previously supplemented (collectively, the "Financing Lease"), between the Authority and the City, pursuant to which the Authority has conveyed a subleasehold interest in the Property (as defined in the Financing Lease) to the City and agreed to finance various Projects (as described therein), and, in exchange, the City will undertake to make rental payments in amounts sufficient to pay the principal of and premium, if any, and interest on all outstanding Bonds under the Trust Agreement (including the Series 2025 Bond), subject to appropriation by the Council from time to time of sufficient amounts for such purposes.

NOW THEREFORE, BE IT RESOLVED BY THE COUNCIL OF THE CITY OF DANVILLE, VIRGINIA:

1. The Council hereby accepts the proposal of the Lender and approves the following plan of financing of the Series 2025 Project. The Authority will issue a federally taxable lease revenue bond in a principal amount not to exceed $2,600,000 (the "Series 2025 Bond"). The Authority will use the proceeds of the Series 2025 Bond to finance the costs of the Series 2025 Project and pay related costs of issuance. Pursuant to the terms of the Financing Lease, the Authority will continue to lease the Property to the City and the City will undertake to make certain rental payments to the Authority in amounts sufficient to pay the principal of and premium, if any, and interest on all outstanding Bonds issued under the Trust Agreement (including the Series 2025 Bond), to pay the fees or expenses of the Authority and the Trustee, and to pay certain other related costs. The obligation of the Authority to pay principal of and premium, if any, and interest on the Bonds (including the Series 2025 Bond) will be limited to the rental payments received from the City. The Bonds (including the Series 2025 Bond) will be secured by an assignment of such rental payments to the Trustee for the benefit of the holders of all outstanding Bonds. The undertaking by the City to make such rental payments will be subject to the appropriation by the Council from time to time of sufficient amounts for such purposes. The plan of financing of the Series 2025 Project shall contain such additional requirements and provisions as may be approved by the City Manager (the "City Manager," which term as used herein shall include any Assistant or Deputy City Manager) and the Chairman or Vice Chairman of the Authority.

2. The Council, while recognizing that it is not empowered to make any binding commitment to make appropriations beyond the current fiscal year, hereby states its intent to make appropriations in future fiscal years in amounts sufficient to make all payments due under the Financing Lease and hereby recommends that future Councils do likewise during the term of the Financing Lease. The Council hereby confirms that the components of the Series 2025 Project are important to the welfare of the City by promoting economic development, and the Council anticipates that such components will continue to be so during the term of the Financing Lease.

3. The Mayor and the City Manager, either of whom may act, are hereby authorized and directed to execute, or acknowledge and consent to, the Documents to which the City is a signatory, which shall be in substantially the forms made available at this meeting. Such forms of the Documents are hereby approved, with such completions, omissions, insertions and changes not inconsistent with this Resolution as may be approved by the officer signing such Documents. Such officer's execution and delivery thereof shall constitute conclusive evidence of such officer's approval of any such completions, omissions, insertions and changes.

4. In making completions to the Supplemental Financing Lease, the City Manager, in collaboration with the Financial Advisor and the Authority, shall provide for payments of Basic Rent and Additional Rent (as each is defined in the Financing Lease) in amounts equivalent to the payments on all outstanding Bonds (including the Series 2025 Bond). The Series 2025 Bond shall be sold to the Lender on terms as shall be satisfactory to the City Manager; provided that the Series 2025 Bond shall (a) be issued in a principal amount (or in aggregate principal advances) not to exceed the amount set forth in Section 1, (b) mature no later than December 31, 2035, (c) have an initial interest rate not to exceed 5.61% per year, (d) be subject to prepayment terms in accordance with the bid submitted by the Lender, and (e) be sold to the Lender at a price not less than 100% of the principal amount thereof. Subject to the foregoing limitations, the City Manager is also hereby authorized to approve, in collaboration with the Chairman or Vice Chairman of the Authority, the final terms of the Series 2025 Bond, all as the City Manager and such officers shall determine to be in the best interests of the City and the Authority. Following the sale of the Series 2025 Bond, the City Manager shall file a certificate with the records of the Council setting forth the final terms of the Series 2025 Bond and the Supplemental Financing Lease. The actions of the City Manager in approving the terms of the Series 2025 Bond and the Supplemental Financing Lease shall be conclusive, and no further action shall be necessary on the part of the City.

5. All costs and expenses in connection with the financing of the Series 2025 Project and the issuance of the Series 2025 Bond, including the Authority's fees and expenses and the related fees and expenses of bond counsel, counsel for the Authority, the Financial Advisor, the Lender and its counsel, shall be paid from the proceeds of the Series 2025 Bond or other legally available funds of the City. If for any reason the Series 2025 Bond is not issued, it is understood that all such fees and expenses shall be paid by the City from its legally available funds and that the Authority shall have no responsibility therefore.

6. The officers of the City are hereby authorized and directed to execute, deliver and file all certificates and documents and to take all such further action as they may consider necessary or desirable in connection with the issuance and sale of the Series 2025 Bond and the financing of the Series 2025 Project.

7. Any authorization herein to execute a document shall include authorization to deliver it to the other parties thereto and, if applicable, to record such document.

8. All other acts of the City Manager and other officers of the City that are in conformity with the purposes and intent of this Resolution and in furtherance of the issuance and sale of the Series 2025 Bond and the financing of the Series 2025 Project are hereby approved and ratified.

9. This Resolution shall take effect immediately.

Approved:

_____

Mayor

Attest:

_____
City Clerk

Approved as to
Form and legal sufficiency:

_____
City Attorney

Council Letter
City of Danville, Virginia

CL - 2007 **NEW BUSINESS H.**

City Council REGULAR MEETING

Meeting Date: May 6, 2025

Subject: Repealing and Replacing Chapter 23.1 of the Danville City Code.

From: Christopher (Ryan) Dodson, Assistant City Attorney

COUNCIL ACTION

An Ordinance Repealing and Reordaining in its Entirety Chapter 23.1, Entitled “Noise”, of the Code of the City of Danville, Virginia, 1986, As Amended.

SUMMARY

City Staff is seeking approval from City Council to update the existing City Code chapter 23.1 relating to noise to enhance enforcement within the City when necessary.

BACKGROUND

Chapter 23.1 (Noise) of the City Code has largely not been updated since 2010. To ensure that the City has access to all enforcement tools available under State law and is engaging in best practices to both protect the public health and the quiet enjoyment of private property, City staff recommends the Council adopt the attached proposed revision of Chapter 23.1.

The proposed revision was drafted with the goals of aligning City law with current State law, enhancing the ability of the police to respond to loud disturbances, and facilitating the safe and convenient enjoyment of private residential dwellings by the residents of the City.

Substantive changes in the proposed revision include:

- Amending the definition of motor vehicle to include additional types of vehicles excluded from the existing definition, such as ATVs, utility vehicles, and mopeds, and removing unused definitions.
- Adding a new power for the police to tow an unattended vehicle whose car alarm continues to sound after 15 minutes of an officer’s arrival.
- Adding new limitations on loud conduct, including intentionally squealing car tires, operating a motor vehicle so as to disturb a dwelling for longer than 20 minutes a day, honking a car horn for longer than 10 seconds except as a warning of danger, and using air cannons to scare birds.
- Adding libraries, nursing homes, and assisted living facilities to the list of noise-sensitive areas where disturbances can be more easily enforced.

RECOMMENDATION

City staff recommends approving the proposed revision of Chapter 23.1 (Noise).

Attachments

1. Ordinance
2. Chapter 23.1 (Noise) 2025

PRESENTED: _____

ADOPTED: _____

ORDINANCE NO. 2025-_____.____

AN ORDINANCE REPEALING AND REORDAINING IN ITS ENTIRETY CHAPTER 23.1, ENTITLED “NOISE”, OF THE CODE OF THE CITY OF DANVILLE, VIRGINIA, 1986, AS AMENDED.

WHEREAS, the current Chapter 23.1, entitled “Noise”, of the Code of the City of Danville, Virginia, needs to be repealed; and

WHEREAS, the current language of Chapter 23.1, entitled “Noise”, of the Code of the City of Danville, Virginia, needs to be updated, revised, and reordained.

NOW THEREFORE, BE IT ORDAINED by the Council of the City of Danville, Virginia, that Chapter 23.1, entitled “Noise”, of the Code of the City of Danville, Virginia, 1986, as amended, be, and the same is hereby, repealed in its entirety; and

BE IT FURTHER ORDAINED, by the Council of the City of Danville, Virginia, that Chapter 23.1, entitled “Noise”, of the Code of the City of Danville, Virginia, 1986, as amended, is hereby, replaced and reordained as attached hereto, and made apart hereof as if fully set out herein.

Approved:

_____
Mayor

Attest:

_____
City Clerk

Approved as to
Form and Legal Sufficiency:

_____
City Attorney

Chapter 23.1 NOISE

Sec. 23.1-1. ~~Declaration of policy~~Purpose.

~~At certain levels, noise can be detrimental to the health, welfare, safety and quality of life of inhabitants of the city, and in the public interest noise should be restricted. It is, therefore, the policy of the city to reduce, and eliminate where possible, excessive noise and related adverse conditions in the community, and to prohibit unnecessary, excessive, harmful and annoying noises from all sources subject to its police power.~~Pursuant to the authority granted to the City by the Code of Virginia and its general police powers, the City does hereby adopt the following Chapter to ensure the rights of habitability and quiet enjoyment by residents to their property, to ensure free and safe access to public areas, to prevent identifiable dangers to persons and property, and to regulate the time, place, and manner of activities that could otherwise threaten the public health, safety, and general welfare, while also protecting to the greatest extent possible while maintaining safety, the exercise of First Amendment expression. After thorough study, the City Council finds that at certain levels, noise can be detrimental to the health, safety, general welfare, and quality of life of City residents, and in the public interest noise such should be restricted. It is, therefore, the policy of the City to reduce, and eliminate where possible, excessive noise and related adverse conditions that are harmful to our community.

Sec. 23.1-2. Definitions.

The following words, when used in this ~~c~~Chapter, shall have the following respective meanings, unless the context clearly indicates a different meaning:

~~*City manager* means the city manager or the Chief of Police, or their respective designees.~~ ~~*Dwelling*~~ means house, apartment, or other unit of a residential nature at which an individual lives.

Excessive noise means any sound of such a nature as to interfere with the peace, comfort, and convenience of any ~~person~~individual, provided such~~. The~~ affected person ~~must~~ is not ~~be in or~~ at the same place ~~where~~ from which the sound is being emitted. ~~Specific examples of prohibited excessive noise are set forth in section 23.1-4 of this chapter.~~

~~*Motor vehicle* means a vehicle defined as a motor vehicle by Code of Virginia, § 46.2-100, as amended any vehicle that is self-propelled or designed for self-propulsion except as otherwise provided herein. *Motor vehicle* includes, but is not limited to any automobile, autocycle, motorcycle, moped, golfcart, all-terrain vehicle, utility vehicle, low-speed vehicle, motorized skateboard or scooter, and electric power-assisted bicycle, as such terms are defined in Virginia Code §46.2-100. *Motor vehicle* does not include any wheelchair, bicycle, electric personal assistive mobility device, personal delivery device, or toy vehicle, as such terms are defined in Virginia Code §46.2-100.~~

~~*Owner* means the person owning, controlling, or possessing land, premises, or personalty.~~

~~*Person* means any individual, partnership, corporation, association, society, club, group of people acting in concert, or organization. This term shall not include the federal, state, city, or local government, or any agency or institution thereof.~~

Public property means any real property owned or controlled by the ~~c~~City or any other governmental entity, ~~or institution~~ including, but not limited to, any public right-of-way.

Plainly audible means any sound that can be heard clearly by a person using his ~~or her~~ unaided hearing faculties. When music is involved, the detection of rhythmic bass tones shall be sufficient to be considered plainly audible sound.

~~*Public right-of-way* means any street, avenue, boulevard, highway, sidewalk or alley.~~

~~*Real property boundary* means the property line along the ground surface, and its vertical extension, which separates the real property owned by one (1) person from that owned by another person.~~

~~*Residential* refers to single-unit, two-unit, and multiunit dwellings, and residential areas of planned residential zoning district classifications, as set out in the zoning ordinance, as amended, as well as hotel and motel zoning classifications.~~

Sound means an oscillation in pressure, particle displacement, particle velocity, or other physical parameter, in a medium with internal forces that cause compression and rarefaction of that medium, and which propagates at a finite speed. The description of sound may include any characteristic of such sound, including duration, intensity, and frequency.

Sound amplifying equipment means any machine or device for the amplification of the human voice, music, or any other sound. ~~This term shall not include warning devices on authorized emergency vehicles, or horns or other warning devices on other vehicles used only for traffic safety purposes.~~

~~*Sponsor* means a person or persons who organizes, supports, specifically benefits from, or is in charge of a mass outdoor social gathering.~~

Sec. 23.1-3. ~~Excessive noise—Punishments~~Administration.

~~Any person violating any of the provisions of this chapter shall be deemed guilty of a Class 2 misdemeanor. Each day the violation is committed or permitted to continue shall constitute a separate offense and shall be punishable as such hereunder.~~(a) *Reserved.*

(b) *Legal remedies*. Unless otherwise specifically provided herein, it shall be a Class 2 misdemeanor for any person to violate any of the provisions of this Chapter and each day thereafter that the violation continues shall constitute a separate offense. In addition to any penalties imposed hereunder, the City may institute legal action to enjoin the continuing violation of this Chapter. If a vehicle alarm sounds continuously for fifteen (15) minutes after the arrival of a law enforcement officer, such officer may additionally arrange for such vehicle to be towed. Nothing in this Chapter shall limit City residents who believe that excessive noise constituting a nuisance exists from seeking any other legal remedies that may be available to them.

(c) *Applicability*. The prohibitions of this Chapter shall not apply to sound generated by any of the following:

(1) Sound which is necessary for the protection or preservation of property or the health or safety of any person;

(2) Alarm systems, prior to the giving of notice and a reasonable opportunity turn off the alarm;

(3) Emergency response vehicles;

(4) Lawful military activities;

(5) The operation of railroads or aircraft;

(6) The striking of clocks;

(7) The lawful discharge of firearms or permitted fireworks displays;

(8) Agricultural activities and activities conducted upon any area permitted by the Virginia Department of Mines, Minerals and Energy;

(9) The use of household tools, lawnmowers, or other lawn care equipment between 6:00 a.m. and 10:00 p.m., provided such equipment has any manufacturer-recommended sound dissipative devices properly installed;

(10) Singing and the operation, playing, or permitting the operation or playing of any radio, musical instrument, or any other device capable of producing or reproducing sound, between the hours of 6:00 a.m. and 12:00 a.m. in the HR-C Highway Retail Commercial District, CB-C Central Business Commercial District, TW-C Tobacco Warehouse Commercial District, or PS-C Planned Shopping Center Commercial District;

(11) Religious services, events, activities, or expressions, including, but not limited to the striking of bells or singing and the operation, playing, or permitting the operation or playing of any radio, musical instrument, or any other device capable of producing or reproducing sound, which are a part of such service, event, activity, or expression; or

(12) Scheduled activities, permitted parades, permitted special events, or activities occurring on public property that are exempt from the requirement to obtain a permit in accordance with Chapter 24 of this Code.

(d) *Zoning*. In the event of a conflict between this Chapter and the Zoning Ordinance of the City, the Zoning Ordinance shall control.

Sec. 23.1-4. ~~Same—Specific prohibitions~~Excessive noise prohibited.

(a) *Public nuisance declared*. The City Council finds that the creation, maintenance, or permitting of excessive noise that interferes with the right of residents to the peaceful and quiet enjoyment of their dwelling in the City is injurious to the public health, safety, and general welfare. Accordingly, it is hereby unlawful and declared a public nuisance for any person to create, maintain, or permit the creation or maintenance of excessive noise within the territorial boundaries of the City.

(b) *Excessive noise enumerated.* Subject to the exceptions provided ~~in section 23.1-5~~herein, any of the following acts, or the causing or permitting thereof, is declared to be *per se* excessive noise~~, constituting a Class 2 misdemeanor and a public nuisance~~ pursuant to this Chapter:

(1) *Sound amplifying equipment.* Using, operating, or permitting the operation of any loudspeaker, public address system, sound truck, or any other similar sound amplifying equipment for any purpose between the hours of 10:00 p.m. and 6:00 a.m. in such a manner as to permit sound to be plainly audible inside the confines of the dwelling of another, or at a distance of fifty (50) feet or more from such equipment;

(2) *Alarm Systems.* Using, operating, or permitting the operation of any alarm system in violation of this Code;

(3) *Shouting and similar vocalization.* Shouting, whistling, or singing between the hours of 10:00 p.m. and 6:00 a.m. in such a manner as to permit sound to be plainly audible inside the confines of the dwelling of another, or at a distance of fifty (50) feet or more from its source or the building, structure, or vehicle in which such source is located;

(4) *Large gatherings.* A gathering of ten (10) or more individuals between the hours of 10:00 p.m. and 6:00 a.m. where the gathering is not contained within a structure, but instead spills outdoors into balconies, yards, common areas, parking lots, or other outdoor spaces, and which creates excessive noise as prohibited by this Chapter;

(5) *Animals.* Permitting any animal to create sound that is plainly audible at least once a minute for twenty (20) consecutive minutes inside the confines of the dwelling of another, or at a distance of fifty (50) feet or more from its source or the building, structure, or vehicle in which such source is located;

(6) *Sound producing devices.* Operating, playing, or permitting the operation or playing of any radio, television, musical instrument, or any other device capable of producing or reproducing sound in such a manner as to permit sound to be plainly audible inside the confines of the dwelling of another, or in such a manner as to be plainly audible at a distance of fifty (50) feet or more from its source or the building, structure, or vehicle in which such source is located;

(7) *Motor vehicles:* Operating or permitting the operation of a motor vehicle within the City in any of the following manners:

a. *Noisy exhaust.* with a gutted muffler, muffler cutout, straight exhaust, or without an exhaust in good working order, as is otherwise prohibited by this Code or Virginia law;

b. *Noisy tires.* by intentionally causing the tires to squeal;

c. *Noisy horn.* by sounding the horn or other auditory sounding device continuously or intermittently for longer than ten (10) seconds in duration unless actually signaling a warning of danger to another;

d. *Disturbing a dwelling.* in such a manner as to permit the sound thereof to be plainly audible at least once a minute for twenty (20) minutes cumulatively during a single 24-hour period inside the confines of the specific dwelling of another; or

e. *Commercial vehicles.* in the case of a commercial vehicle, including, but not limited to, a solid waste removal vehicle, by operating such vehicle between the hours of 10:00 p.m. and 6:00 a.m. in such a manner as to be plainly audible inside the confines of the dwelling of another, or at a distance of fifty (50) feet or more from its source, except in the CB-C Central Business Commercial District;

(8) *Construction.* Construction activities, including, but not limited to, clearing, excavating, building, demolishing, altering, or repairing of any structure or improvement between the hours of 10:00 p.m. and 6:00 a.m., except in the case of emergency under a valid permit issued by the City. *Construction* also includes, but is not limited to, the operation of any chainsaw, pneumatic hammer, piledriver, steam shovel, crane, or other similar mechanical equipment;

(9) *Blasting.* The use or firing any explosives, fireworks, or similar devices which create impulsive sound in such a manner as to permit sound to be plainly audible at a distance of fifty (50) feet or more from its source, except pursuant to a valid permit for such activity issued by the City;

(10) *Air Cannons.* The use, without prior approval by the City, of any air cannon, carbide cannon, or similar loud explosive devices which are designed to produce high intensity sound percussions for the purpose of repelling birds, provided that a violation of this provision shall constitute a Class 3 misdemeanor; or

(11) *Noise-sensitive areas.* The creation of any sound upon the grounds of any school, library, court, public building, place of worship, hospital, nursing home, or assisted-living facility in a manner that is plainly audible therein and interferes with the operation thereof.~~(1) *Radios, television sets, musical instruments and similar devices.* Operating, playing or permitting the operation or playing of any radio, television, record, tape or compact disc player, drum, musical instrument, or any device capable of producing or reproducing sound, or similar device:~~

~~a. In such a manner as to permit sound to be heard inside the confines of the dwelling unit, house, or apartment of another person; or~~

~~b. In such a manner as to be plainly audible at a distance of fifty (50) feet or more from the building in which it is located; or~~

~~c. When the sound is plainly audible at a distance of fifty (50) feet or more from its source.~~

~~(2) *Loudspeakers, public address systems and sound trucks.* Using, operating or permitting the operation of any loudspeaker, public address system, mobile sound vehicle or similar device amplifying sound therefrom for any purpose between the hours of 10:00 p.m. and 6:00 a.m. in such a manner as to permit sound to be heard (i) inside the confines of the dwelling unit, house, or apartment of another person; or (ii) at fifty (50) or more feet from the device.~~

~~(3) *Horns, whistles, etc.* Sounding or permitting the sounding of any horn, whistle or other auditory sounding device on or in any motor vehicle on any public right-of-way or public property, except as a warning of danger.~~

~~(4) *Explosive, fireworks and similar devices.* Using or firing any explosives, fireworks or similar devices which create impulsive sound in such a manner as to permit sound to be heard. An exception to this subsection may be granted by the City Manager through a fireworks permit.~~

(5) *Yelling, shouting, etc.* Yelling, shouting, whistling or singing between the hours of 10:00 p.m. and 6:00 a.m. in such a manner as to permit sound to be heard (i) inside the confines of the dwelling unit, house, or apartment of another person; or (ii) at fifty (50) or more feet from the device.

(6) *Schools, public buildings, places of worship, and hospitals.* The creation of any noise on the grounds of any school, court, public building, place of worship, or hospital in a manner that is plainly audible within such school, court, public building, place of worship or hospital and interferes with the operation of the institution.

(7) *Vehicles:*

a. Operation of a motor vehicle or operation of a motorcycle within the city with a gutted muffler, muffler cutout, straight exhaust, or without an exhaust in good working order, as provided by Code of Virginia, §§ 46.2-1047 and 46.2-1049.

b. Operation of sound amplifying equipment in a motor vehicle at a volume sufficient to be plainly audible at a distance of fifty (50) feet from the vehicle.

(8) [Reserved.]

(9) *Construction.* The erection, including excavation, demolition, alteration, or repair of any building or improvement between the hours of 10:00 p.m. and 6:00 a.m., except in the case of emergency under a permit granted by the city manager. In considering the granting, conditioning, or denial of the permit, the city manager shall be guided by the following standards:

a. Nature of the emergency;

b. Proposed extended hours of operation;

c. Duration of period of requested extended hours;

d. Character of the area surrounding the construction site; and

e. Number of residential units which would be impacted by the extended hours of construction.

(10) *Pneumatic hammer, chain saw, etc.* The operation between the hours of 10:00 p.m. and 6:00 a.m. of any chain saw, pile driver, steam shovel, pneumatic hammer, derrick, steam or electric hoist, or other appliance.

(11) *Animals.* Allowing any animal or bird to create noise that is plainly audible at least once a minute for twenty (20) consecutive minutes (i) inside the confines of the dwelling unit, house, or apartment of another; or (ii) at a distance of fifty (50) feet or more from the animal or bird. This subsection shall not apply to any bona fide agricultural activity.

(12) *Large party public nuisance.* A gathering of ten (10) or more people where the gathering is not contained within a structure, but spills outdoors into balconies, yards, common areas, parking lots, or other outdoor spaces, which creates excessive noise as prohibited by this chapter.

(13) *Commercial vehicle and trash collection vehicle operation.* Except in the downtown commercial zoning district, the operation of a commercial vehicle or trash collection vehicle between the hours of 10:00 p.m. and 7:00 a.m., in such a manner as to be plainly audible inside the confines of a dwelling unit, house, or apartment or at a distance of fifty (50) feet or more.

Sec. 23.1-5. Same—Exceptions.

Sections 23.1-3 and 23.1-4 shall have no application to any sound generated by any of the following:

(1) Sound which is necessary for the protection or preservation of property or the health, safety, life or limb of any person.

(2) Public speaking and public assembly activities conducted on any public right-of-way or public property.

~~(3) Radios, sirens, horns, and bells on police, fire, or other emergency response vehicles.~~

~~(4) Parades, fireworks displays, school-related activities, and other such public special events or public activities.~~

~~(5) Activities on or in municipal, state, United States, or school athletic facilities, or on or in publicly owned property and facilities.~~

~~(6) Fire alarms and burglar alarms, prior to the giving of notice and a reasonable opportunity for the owner or person in possession of the premises served by any such alarm to turn off the alarm.~~

~~(7) Religious services, religious events, or religious activities or expressions, including, but not limited to music, singing, bells, chimes, and organs which are a part of such service, event, activity, or expression.~~

~~(8) Locomotives and other railroad equipment, and aircraft.~~

~~(9) The striking of clocks.~~

~~(10) Military activities of the Commonwealth of Virginia or of the United States of America.~~

~~(11) Household tools, lawnmowers, and other lawn care equipment with manufacturer's recommended mufflers installed, between 6:00 a.m. and 10:00 p.m.~~

~~(12) Agricultural activities.~~

~~(13) Lawful discharge of firearms.~~

~~(14) The operation, playing or permitting the operation or playing of any drum, musical instrument, record, tape, compact disc player, or any device capable of producing or reproducing sound, between the hours of 6:00 a.m. and 12:00 a.m. in the following zoning districts:~~

~~a. HR-C Highway Retail Commercial District;~~

~~b. CB-C Central (Downtown) Business Commercial District;~~

~~c. TW-D Tobacco Warehouse Commercial District; or~~

~~d. PS-C Planned Shopping Center Commercial District.~~

~~Sec. 23.1-6. Other enforcement.~~

~~(a) Instead of the criminal enforcement of this chapter, the city may bring a suit for injunction, abatement, or other appropriate civil relief to remedy, correct, or abate excessive noise.~~

~~(b) Citizens of the city believing that excessive noise constituting a public nuisance exists may utilize the procedure set forth in Code of Virginia, § 48-1 *et seq.*, as amended, or any other legal civil or criminal remedies that may be available to them.~~

Council Letter
City of Danville, Virginia

CL - 1934 **NEW BUSINESS I.**

City Council REGULAR MEETING

Meeting Date: May 6, 2025

Subject: Fiscal Year 2025 Comprehensive Services Act Appropriation.

From: Henrietta Weaver, Budget Director

COUNCIL ACTION

An Ordinance Amending the Fiscal Year 2025 Budget Appropriation Ordinance by Appropriating Comprehensive Services Act Funds and Providing Local Matching Funds for a Total Amount of $5,709,442 and Appropriating Same.

First Reading

SUMMARY

The Comprehensive Services Act (CSA) was enacted in Fiscal Year 1994, by the Virginia General Assembly, for the purpose of eliminating duplication of services for at-risk children and families. Whenever possible, CSA services must be child specific and community based. Services may be residential or non-residential, private or public, and must be responsive to the child's unique needs and culture. These services may currently exist within the public agencies, such as mental health, social services, education, and court services, or may be available privately. Examples include, but are not limited to: substance abuse counseling, respite care, psychological evaluations, transportation services, home-based therapy, family counseling, parent training, therapeutic foster care, job coaching, after school care, recreation, and housing assistance.

In January 2013, the City began operating its own Community Policy and Management Team (CPMT). This resulted from the request of Pittsylvania County to dissolve the joint Danville-Pittsylvania County Community Policy and Management Board (CPMB). A full-time person has been hired under the Division of Social Services to coordinate the City only program. There has been no increased administrative cost to the City as the administration funds that were being paid to Pittsylvania County are now being used to support the City only program.

BACKGROUND

Daily, the schools, social services and court service units are faced with a number of societal issues, such as locating services for abused, neglected, delinquent and special services children with significant mental and physical health impairments. In addition, these organizations work with children with behavioral problems that require specialized placements for treatment, truancy, and children whose disabilities are so severe they are unable to function within the community. These disabilities and behavioral issues include, but are not limited to: Autism, Bipolar Disorder, Schizophrenia, Sexual Reactive Disorder, Post Traumatic Stress Disorder, Suicidal Ideation, Conduct Disorder, Attachment Disorder, and Mental Retardation. The overall focus of CSA continues to be servicing at-risk children and families. Great strides have been made in bringing additional resources for services to the community. Service providers are meeting the increased demand for specialized programs while trying to manage the costs of such programs. The community partners continue to be faced with younger children whose disabilities are so severe that many times the children cannot be treated locally. The

agencies that serve on the CPMT explore all options to provide for the needs of Danville's families and children by utilizing cost-effective measures to reduce expenditures to the locality. These measures include using Medicaid vendors, when appropriate, reviewing progress reports prior to authorizing additional service units, when feasible, and reviewing eligibility for IV-E funding which reimburses the locality 100% of allowable costs.

RECOMMENDATION

It is recommended that the City Council adopt the attached ordinance to approve Fiscal Year 2025 State and local funding for the CSA program. The required local match is included in the Adopted Fiscal Year 2025 City of Danville Budget.

Attachments

1. Ordinance

PRESENTED: _____

ADOPTED: _____

ORDINANCE NO. 2025-____.____

AN ORDINANCE AMENDING THE FISCAL YEAR 2025 BUDGET APPROPRIATION ORDINANCE BY APPROPRIATING COMPREHENSIVE SERVICES ACT FUNDS AND PROVIDING LOCAL MATCHING FUNDS FOR A TOTAL AMOUNT OF $5,709,442 AND APPROPRIATING SAME.

NOW THEREFORE, BE IT ORDAINED, by the Council of the City of Danville, Virginia that the Fiscal Year 2025 Budget Appropriation Ordinance be, and is hereby, amended by increasing revenues to anticipate the State and Local funds for the Comprehensive Services Act (CSA) fund and appropriating such funds within the Special Grants Fund, such appropriation to be as follows:

ANTICIPATED REVENUES

Description	Account No.	Amount
Categorical Aid – State:		
Comprehensive Services Act -		
Pool Funds	60315000-45560	4,189,903
Administrative Funds	60315000-45570	19,539
Local Share		
Transfer in from General Fund	60315000-6101	1,500,000
	Total	**5,709,442**

ANTICIPATED EXPENDITURES

Description	Account No.	Amount
Comprehensive Services Act:		
Salaries, Fulltime	60315000-51100	96,490
FICA	60315000-51450	10,000
Retirement	60315000-51525	5,300
Group Health Insurance	60315000-51600	14,500
Group Life Insurance	60315000-51630	500
Outside Services	60315000-52349	5,394,852
Print Shop	60315000-52650	1,200
PS-Office Supplies	60315000-52655	1,400
Postage	60315000-54050	1,000
Telephone	60315000-54100	1,000

Travel & Training	60315000-54900	2,500
Local Only – CSA	60315000-55420	25,000
CSA Medicaid	60315000-55570	150,000
Office Supplies	60315000-55820	4,000
Materials & Supplies	60315000-55930	500
Dues	60315000-56242	1,200
	Total	**5,709,442**

AND BE IT FURTHER ORDAINED, that a flexible budget is hereby authorized whereby appropriations may be increased to the extent that actual revenues from the CSA Pool Fund exceeds the original budget amount; and

BE IT FINALLY ORDAINED, that all other accounts and provisions of the Fiscal Year 2025 Budget appropriation Ordinance, as amended, not hereby amended, shall continue in full force and effect unless and until thereafter further amended or repealed.

Approved:

_____
Mayor

Attest:

_____
City Clerk

Approved as to
Form and Legal Sufficiency:

_____
City Attorney

Council Letter
City of Danville, Virginia

CL - 1973 **NEW BUSINESS J.**

City Council REGULAR MEETING

Meeting Date: May 6, 2025

Subject: Fiscal Year 2025 Budget Appropriation for the Victim Witness Grant Program.

From: Henrietta Weaver, Budget Director

COUNCIL ACTION

An Ordinance Amending the Fiscal Year 2025 Budget Appropriation Ordinance to Provide for a Grant from the State for a Victim Witness Program in the Amount of $177,083, with a Local Match of $1,250 for a total of $178,333 and Appropriating Same.

First Reading

SUMMARY

The City received notice from the Commonwealth of Virginia Department of Criminal Justice Services of the approval of Federal funding in the amount of $177,083, with a local match of $1,250, for the continuation of the City's Victim/Witness Assistance Program, which is operated through the Commonwealth Attorney's Office. The Victim/Witness Assistance Program provides assistance to victims of criminal offenses (e.g. rape, felonious assault, child sexual and physical abuse, homicide, domestic violence) occurring in Danville. The program provides direct and referral services to meet specific needs (e.g. mental health, social services, legal, medical) and files claims for crime victim's compensation. The program also provides a court escort, an explanation of criminal court procedures, intervenes with employers, collection agencies and landlords when a victim's injuries result in loss of income, and monitors court-related restitution payments.

BACKGROUND

The goal of the Victim/Witness Assistance Program is to alleviate the confusion, pain, and suffering experienced by innocent victims of violent crime occurring in Danville. This is an annual grant.

RECOMMENDATION

It is recommended that Council adopt the attached ordinance amending the Fiscal Year 2025 Budget Appropriation Ordinance.

Attachments

1. Ordinance

PRESENTED: _____

ADOPTED: _____

ORDINANCE NO. 2025 - ____.____

AN ORDINANCE AMENDING THE FISCAL YEAR 2025 BUDGET APPROPRIATION ORDINANCE TO PROVIDE FOR A GRANT FROM THE STATE FOR A VICTIM WITNESS PROGRAM IN THE AMOUNT OF $177,083, WITH A LOCAL MATCH $1,250 FOR A TOTAL OF $178,333 AND APPROPRIATING SAME.

NOW THERFORE, BE IT ORDAINED, by the Council of the City of Danville, Virginia that the Fiscal Year 2025 Budget Appropriation Ordinance be, and it is hereby, amended by increasing revenues to provide for a grant from the Commonwealth of Virginia, Department of Criminal Justice Services, in an amount of $178,333, with a local match of $1,250, for the purpose of operating a victim witness program within the City of Danville, and appropriating same within the Special Grants Fund, such revenue and appropriation to be a follows:

ANTICIPATED REVENUES

Description	Account No.	Amount
Victim Witness Grant		
Federal Aid	60301350-48055	$108,440
State General Funds	60301351-47060	$68,643
Local Share		
Transfer in from General Fund	60301352-6101	$1,250
	Total	$178,333

EXPENDITURES

Description	Account No.	Amount
Victim Witness Grant		
Federal		
Salaries & Wages	60301350-51100	$95,916
FICA	60301350-51450	3,915
Retirement VRS	60301350-51500	5,456
VRS Disability Insurance	60301350-51636	270
Print Shop – Office Supplies	60301350-52655	1,333
Postage	60301350-54050	330
Telephone/Internet	60301350-54100	263
Travel/Training	60301350-54900	651
Subsistence	60301350-54905	306
	Sub-total	$108,440

State		
Salaries & Wages	60301351-51100	$49,412
FICA	60301351-51450	7,202
Retirement VRS	60301351-51500	10,036
VRS Disability Insurance	60301351-51636	498
Print Shop – Office Supplies	60301351-52655	692
Postage	60301351-54050	170
Telephone/Internet	60301351-54100	137
Travel/Training	60301351-54900	337
Subsistence	60301351-54905	159
	Sub-total	$68,643
Local		
Other Taxable Compensation	60301352-51155	1,250
	Total	$178,333

AND BE IT FURTHER ORDAINED, that a transfer from Special Grants Unallocated revenue and appropriation is hereby authorized to cover the local share as follows:

TRANSFER FROM

Description	Account No.	Amount
Special Revenue Fund		
Transfer In from General Fund	60098000-6101	($ 1,250)
Unallocated	60098000-6999	($ 1,250)

AND BE IT FURTHER ORDAINED, that all other accounts and provisions of the Fiscal Year 2025 Budget Appropriation Ordinance, as amended, not hereby amended, shall continue in force and effect unless and until hereafter further amended or repealed.

Approved:

_____
Mayor

Attest:

_____
City Clerk

Approved as to
Form and Legal Sufficiency:

_____
City Attorney

Council Letter
City of Danville, Virginia

CL - 2005 **NEW BUSINESS K.**

City Council REGULAR MEETING

Meeting Date: May 6, 2025

Subject: Budget Appropriation Ordinance for a Shield Grant.

From: David Whitley, Assistant Chief, Operations Division

COUNCIL ACTION

An Ordinance Amending the Fiscal Year 2025 Budget Appropriation Ordinance by Increasing Revenue from Virginia Department of Criminal Justice Services–BJA Fiscal Year 2024 Byrne/JAG Program Ballistic Shield Grant in the Amount of $15,381 and Appropriating the Same.

First Reading

SUMMARY

The City of Danville has been awarded a grant from the BJA Fiscal Year 2024 Edward Byrne Memorial Justice Assistance Grant (JAG) Program - Local Solicitation Funding Opportunity 172239 in the amount of $15,381.

BACKGROUND

The awarded funding will be used to purchase and deploy 19 RTS Tactical Level III Mini Shields. Six (6) will be deployed in vehicles assigned to School Resource Officer vehicles. Thirteen (13) will be deployed in marked patrol vehicles. The addition of this equipment immediately improves officer, school, and public safety by providing quick deployment during dangerous situations where enhanced ballistic protection is needed.

RECOMMENDATION

Department staff recommends adoption of this ordinance to enhance officer and public safety.

Attachments

1. Ordinance

PRESENTED:_____

ADOPTED:_____

ORDINANCE NO. 2025 -_____._____

AN ORDINANCE AMENDING THE FISCAL YEAR 2025 BUDGET APPROPRIATION ORDINANCE BY INCREASING REVENUE FROM VIRGINIA DEPARTMENT OF CRIMINAL JUSTICE SERVICES – BJA FISCAL YEAR 2024 BYRNE/JAG PROGRAM BALLISTIC SHIELD GRANT IN THE AMOUNT OF $15,381 AND APPROPRIATING THE SAME.

WHEREAS, the City of Danville has been awarded a grant from the BJA FY 24 Edward Byrne Memorial Justice Assistance Grant (JAG) Program - Local Solicitation Funding Opportunity 172239 in the amount of $15,381; and

WHEREAS, the funding will be used to purchase and deploy 19 RTS Tactical Level III Mini Shields. Six (6) will be deployed in vehicles assigned to School Resource Officer vehicles. Thirteen (13) will be deployed in marked patrol vehicles. The addition of this equipment immediately improves officer, school, and public safety by providing quick deployment during dangerous situations where enhanced ballistic protection is needed.

NOW THEREFORE, BE IT ORDAINED, by the Council of the City of Danville, Virginia that the Fiscal Year 2025 Budget Appropriation Ordinance be, and the same is hereby, amended by increasing revenue to anticipate the receipt of funds in the amount of $15,381 from the BJA FY24 Edward Byrne Memorial Justice Assistance Grant (JAG) Program, such revenue and appropriation to be as follows:

ANTICIPATED REVENUE

Description	Account No.	Amount
DCJS BJA FY24 Byrne/JAG Program – Ballistic Shield Grant		
Categorical Aid – State Public Safety	62000000-47060	$15,381

ANTICIPATED EXPENDITURES

Description	Account No.	Amount
DCJS BJA FY24 Byrne/JAG Program – Ballistic Shield Grant	62000999-50	$15,381

AND BE IT FURTHER ORDAINED, that this appropriation shall be a continuing appropriation and shall carry forward from year to year until expended for the purpose for which appropriated; and

BE IT FINALLY ORDAINED, that all other accounts and provisions of the Fiscal Year 2025 Budget Appropriation Ordinance, as amended, not hereby amended, shall continue in full force and effect unless and until hereafter further amended or repealed.

Approved:

_____
Mayor

ATTEST:

_____
City Clerk

Approved as to
Form and Legal Sufficiency:

_____
City Attorney

Council Letter
City of Danville, Virginia

CL - 2025 **NEW BUSINESS L.**

City Council REGULAR MEETING

Meeting Date: May 6, 2025

Subject: Budget Appropriation Ordinance for a Virginia Department of Criminal Justice Services Crisis Intervention Team (CIT) / Marcus Alert Grant.

From: Steve Richardson, Police Captain

COUNCIL ACTION

An Ordinance Amending the Fiscal Year 2025 Budget Appropriation Ordinance by Increasing Revenue from Virginia Department Criminal Justice Services – FY 2025 CIT/MARCUS Alert Grant Program in the Amount of $100,000 and Appropriating Same.

First Reading

SUMMARY

The City of Danville has been awarded a grant from the Virginia Department of Criminal Justice Services 2025 CIT/ MARCUS Alert Grant 544422 opportunity, in the amount of $100,000.

BACKGROUND

The Danville Police Department partners with Danville-Pittsylvania Community Services to provide services for individuals in crisis, and are working to fully implement a MARCUS Alert co-response model consistent with requirements mandated in the Code of Virginia. The awarded grant funds from the Department of Criminal Justice Services 2025 CIT Marcus Alert grant opportunity will be used to purchase two Chevrolet Tahoe SUVs for the initial implementation and deployment of a MARCUS Alert model. The model will partner sworn members of the Danville Police Department and trained mental health clinicians from Danville-Pittsylvania Community Services for co-response to behavioral health-related incidents. The vehicles will be used to service Danville and Pittsylvania County through the partnership with Danville-Pittsylvania Community Services, with each law enforcement agency sharing maintenance and upkeep expenses of the vehicles after acceptance.

RECOMMENDATION

Staff recommends that City Council adopt the attached Ordinance amending the Fiscal Year 2025 Budget Appropriation Ordinance.

Attachments

1. Ordinance

PRESENTED:_____

ADOPTED: _____

ORDINANCE NO. 2025____.____

AN ORDINANCE AMENDING THE FISCAL YEAR 2025 BUDGET APPROPRIATION ORDINANCE BY INCREASING REVENUE FROM VIRGINIA DEPARTMENT CRIMINAL JUSTICE SERVICES – FY2025 CIT/MARCUS ALERT GRANT PROGRAM IN THE AMOUNT OF $100,000 AND APPROPRIATING SAME.

WHEREAS, the City of Danville has been awarded a grant from the Virginia Department of Criminal Justice Services 2025 CIT/ MARCUS Alert Grant 544422 in the amount of $100,000; and

WHEREAS, the funding will be used to purchase (2) Chevrolet Tahoe's for implementation and deployment of a MARCUS Alert model partnering sworn members of the Danville Police Department and trained mental health clinicians from Danville Pittsylvania Community Services for co-response to behavioral health related incidents. The vehicles will be used to service Danville and Pittsylvania County through the partnership with Danville Pittsylvania Community Services, with each law enforcement agency sharing maintenance and upkeep expenses of the vehicles after acceptance.

NOW THEREFORE, BE IT ORDAINED, by the Council of the City of Danville, Virginia that the Fiscal Year 2025 Budget Appropriation Ordinance be, and the same is hereby, amended by increasing revenue to anticipate the receipt of funds in the amount of $100,000 from the Virginia Department of Criminal Justice Services, such revenue and appropriation to be as follows:

ANTICIPATED REVENUE

Description	Account No.	Amount
DCJS Marcus Alert Grant Categorical Aid – State Public Safety	62002000-47060	$100,000

ANTICIPATED EXPENDITURES

Description	Account No.	Amount
DCJS Marcus Alert Grant	62002999-50	$100,000

AND BE IT FURTHER ORDAINED that this appropriation shall be a continuing appropriation and shall carry forward from year to year until expended for the purpose for which appropriated; and

BE IT FINALLY ORDAINED that all other accounts and provisions of the Fiscal Year 2025 Budget Appropriation Ordinance, as amended, not hereby amended, shall continue in full force and effect unless and until hereafter further amended or repealed.

Approved:

_____
Mayor

Attest:

_____
City Clerk

Approved as to
Form and Legal Sufficiency:

_____
City Attorney